RJ51161	Dave15-5-2
1104C-44TA	2003/05/15

The information given within this parts book was correct at the time of printing and is subject to change without notice. Always refer to your local Perkins outlet for the latest information. Only fully trained personnel should carry out servicing of engines. Before working on any engine always refer to the correct user service and maintenance manual.

Always refer to your local Perkins outlet before purchasing any parts

Subject to any existing rights of third parties, the information given in this document is the property of Perkins Engines Limited and should not be copied, in whole or part, without the prior written consent of the Company.

Contents

1.	Introduction	Pg. 4
2.	How To Use Your Parts Book	Pg. 4
3.	Engine Breakdown	Pg. 5
4.	Symbol Descriptions	Pg. 8
5.	Parts Lists & Illustrations	Pg. 11
6.	Parts Index	Pg. 167

Introduction

The build list of your engine, found on the front page of this parts book, provides a unique reference to the components fitted to your engine; therefore this parts book is **only** applicable to this particular engine

Always quote your build list and engine serial number when contacting your Perkins outlet.

How to use your Parts Book

This parts book has been designed to provide you with all the information you need to identify parts to service your engine. There are several features within the book to make it easy to find the parts you require.

Front Page

This lists your build list number and the date of publication of this book

Symbol Descriptions

Provides a quick reference guide to the symbols used within the book.

Engine Breakdown

Use this to identify all the major sections of your engine and the relevant pages within the book.

Parts Lists & Illustrations

This section shows each major section of your engine broken down into individual part numbers along with an associated illustration for identifying the parts you require.

The illustrations used in this parts book are representational only and should only be used for identification purposes.

For fitting instructions please refer to your engine Service Manual.

Parts Index

Using either the part number or description of the part you require this section will help you locate the page within the **Parts Lists & Illustrations** section where the part appears.

Section	Page
Cylinder Block & Liners ACHR0047	11
Crankshaft, Main & Big End Bearings ACHR0047	13
Pistons & Rings ACHR0047	15
Connecting Rods ACHR0047	17
Rear End Oil Seal ACHR0047	19
Cylinder Head Assembly ACHR0047	21
Rocker Shaft Assembly ACHR0047	23
Timing Gear & Camshaft ACHR0047	25
Fuel Injection Pump AFHR4291	27
High Pressure Fuel Pipes AFHR4291	29
Atomisers AFHR4291	31
Throttle & Stop Controls AFHR4291	33
Pick-Up Sensor AFHR4291	35
Pick-Up Sensor AFHR4291	37
Boost Control Pipe AFHR4291	39

Section	Page
Fuel Leak-Off Pipe AFHR4291	41
Flywheel Housing CDHR1043	43
Flywheel & Starter Ring DDHR0840	45
Starter Motor EDHR0847	47
Fan Drive FBHR0871	49
Sump GBHR2322	51
Dipstick & Filler Tube GBHR2322	53
Oil Strainer GBHR2322	55
Cylinder Head Cover HBHR2782	57
Cylinder Head Cover HBHR2782	59
Breather HBHR2782	61
Blanking Plates HBHR2782	63
Oil Cooler JBHR2346	65
Oil Filter JBHR2346	67
Blanking Plates JBHR2346	69

Section	Page
Remote Lubricating Oil Cooler JDHR0023	71
Front End Drive Input KBHR0535	73
Water Pump LBHR2253	75
Water Pump LBHR2253	77
Pipes LBHR2253	79
Water Outlet Housing LDHR0702	81
Fan MDHR1087	83
Alternator NDHR2710	85
Alternator Bracket & Fixings NDHR2710	87
Pulleys NDHR2710	89
Timing Case QCHR0024	91
Timing Case QCHR0024	93
Timing Cover QCHR0024	95
Blanking Plates QDHR1380	97
Blanking Plugs QDHR1380	99

Section	Page
Lubricating Oil Pump & Delivery Housing RBHR0031	101
Turbocharger SBHR1510	103
Feed Pipes SBHR1510	105
Leak-Off Pipes SBHR1510	107
Air Filters SBHR1510	109
Air Filters SBHR1510	111
Pipework & Connections SBHR1510	113
Exhaust Manifold SBHR1510	115
Induction Manifold TBHR0855	117
Pipework & Connections TBHR0855	119
Lift Pump VBHR2238	121
Filter to Injection Pump Pipe VBHR2238	123
Injection Pump to Filter Pipe VBHR2238	125
Heater Plugs WDHR0345	127
Engine Lifting Eyes XBHR0458	129

Section	Page
Engine Mounts **ZCHR0945**	**131**
Engine Mounts **ZCHR0945**	**133**
Heater Switch **ZEHR0722**	**135**
Lubricating Oil Pressure Switch/Gauge **ZJHR0533**	**137**
Temperature Gauge & Sender **ZLHR0361**	**139**
Temperature Gauge & Sender **ZLHR0361**	**141**
Radiator & Cowling **ZMHR0549**	**143**
Radiator & Cowling **ZMHR0549**	**145**
Radiator Bracket & Fixings **ZMHR0549**	**147**
Radiator & Hoses **ZMHR0549**	**149**
Radiator & Hoses **ZMHR0549**	**151**
Radiator & Hoses **ZMHR0549**	**153**
Guards **ZMHR0549**	**155**
Fuel Pre-Lift Pump **ZVHR0102**	**157**
Fuel Pre-Lift Pump **ZVHR0102**	**159**

Section	Page
Miscellaneous & Auxiliaries **ZZHR1012**	**161**
Top Service Kit **SACR0001**	**163**
Bottom Service Kit **SGBR0371**	**165**

Symbols and Notes

Symbol	Description
	From Engine Number
	Upto Engine Number
	Repairs and Replaces
	See Appropriate Section - Reference Number
	Alternative
	Order
	Remanufactured Part
	New for Old Part
	Number of Teeth
	Thickness
	Bottom
	Top
	Left Hand
	Right Hand
	Reference for Detailed Breakdown
	Other Service Options Available
	Cylinder Number
	See History Section

ACHR0047

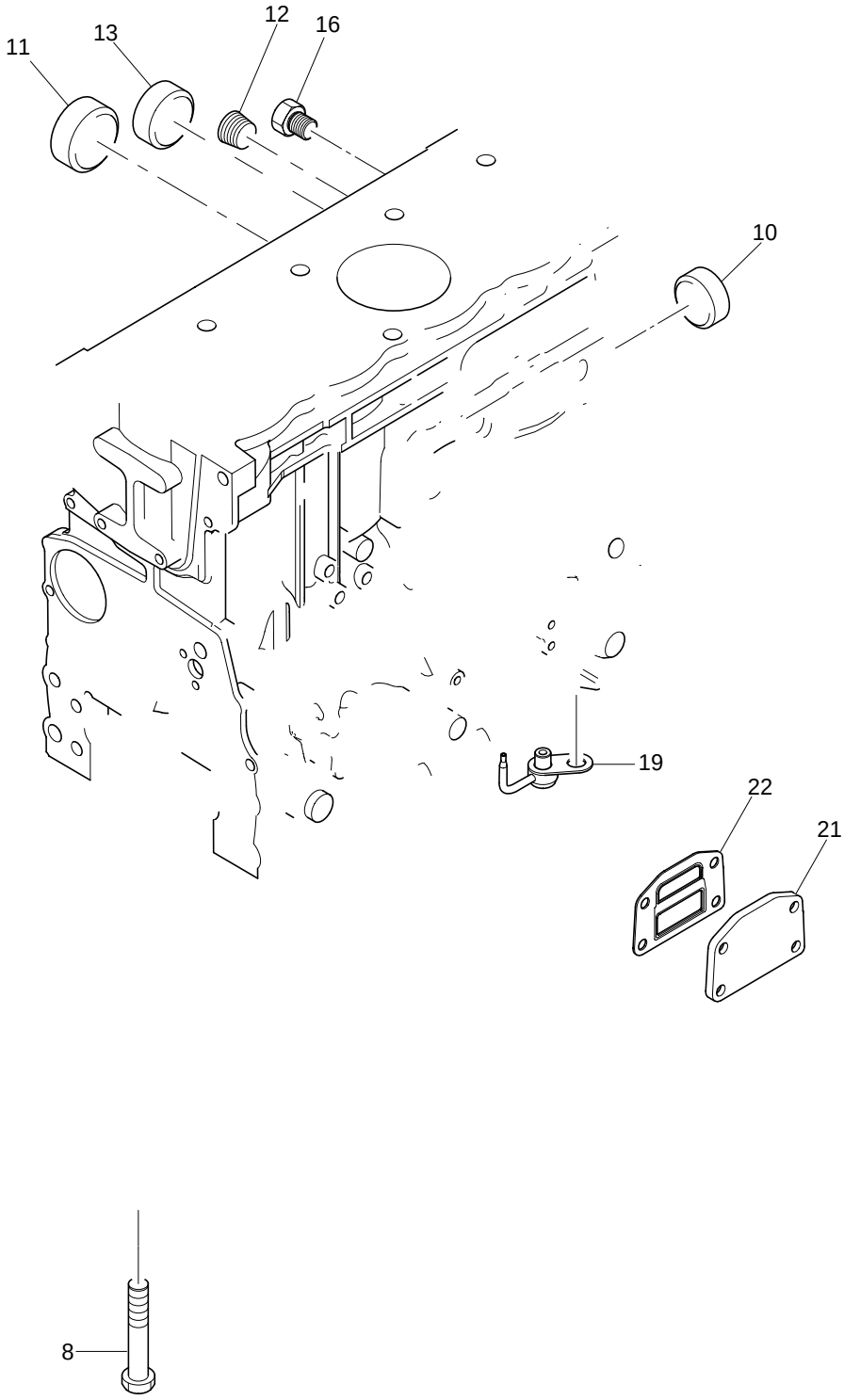

ACHR0047

Item	Part No.	References	Qty.	Description	Notes
1	ZZ50311		1	CYLINDER BLOCK KIT	
2		ZZ50311	1	CYLINDER BLOCK	
3		ZZ50311	1	BEARING CAP	
4		ZZ50311	2	BEARING CAP	
5		ZZ50311	1	BEARING CAP	
6		ZZ50311	1	BEARING CAP	
7	33142111		10	THIMBLE	
8	32166329		10	SCREW	
9	3112D071		1	CAMSHAFT BUSH	
10	3241A012		1	PLUG	
11	3241A011		2	PLUG	
12	0650588		1	PLUG	
13	0650710		1	PLUG	
14	3212P008		1	PLUG	
15	3244A009		2	DOWEL	
16	32141316		2	PLUG	
17	2485A108		1	BLANKING PLUG	
18	3212V006		1	PLUG	
19	2113A001		4	PISTON COOLING JET	
20	2314F001		4	SCREW	
21	3623A009		1	BLANKING PLATE	
22	3688A039		1	JOINT	
23	2314H033		4	SCREW	

ACHR0047

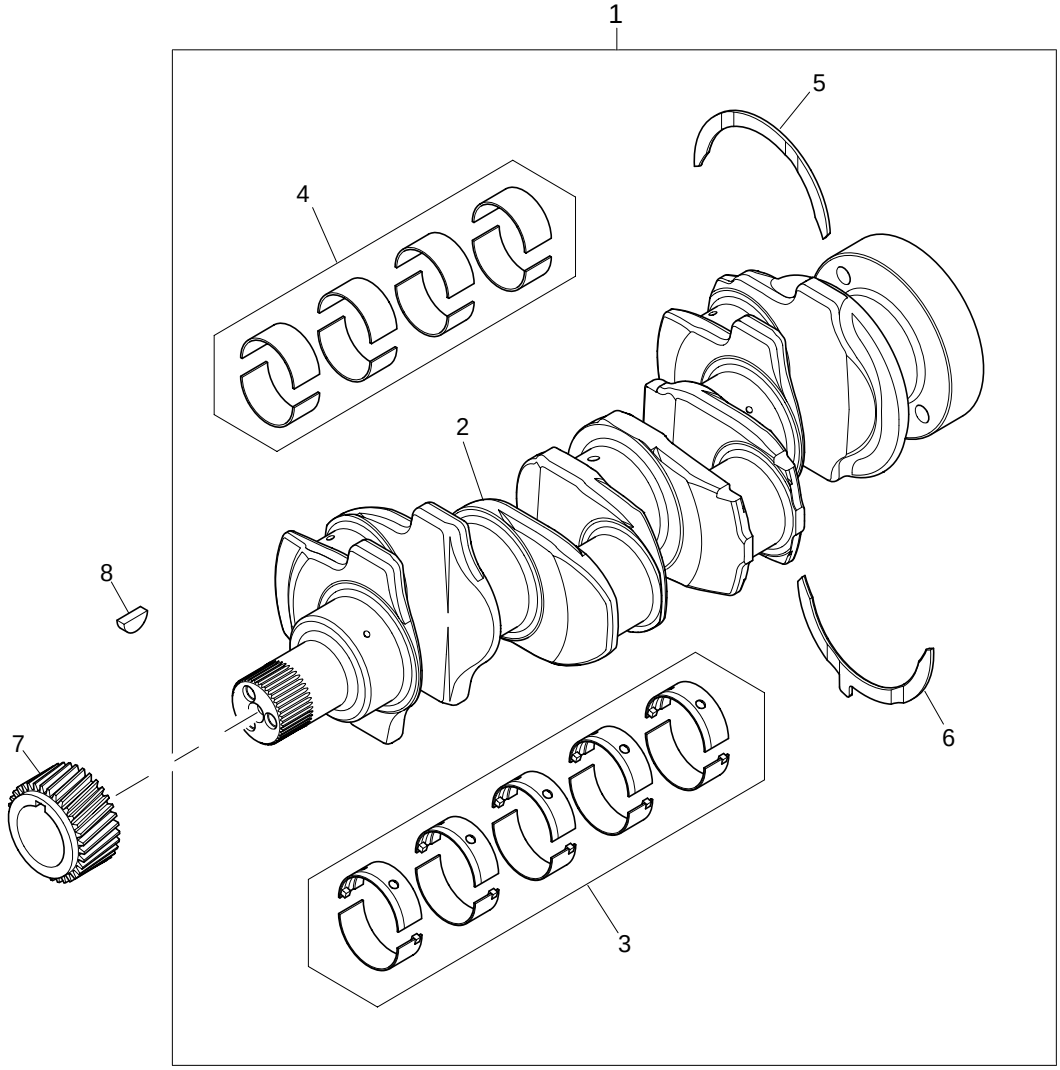

Crankshaft, Main & Big End Bearings	Plate A
	ACHR0047

Item	Part No.	References	Qty.	Description	Notes
1	ZZ90222		1	CRANKSHAFT KIT	
2	├	ZZ90222	1	CRANKSHAFT	
3	├ U5MB0018	S	1	MAIN BEARING KIT	
4	├ U5ME0013	S	1	BIG END BEARING KIT	
5	├ 31137551	S	2	THRUST WASHER	
6	└ 31137561	S	2	THRUST WASHER	
7	3117C221		1	CRANKSHAFT GEAR	
8	0500012		1	WOODRUFF KEY	
Service Options					
3	U5MB0018A	(+) 0.010"	1	MAIN BEARING KIT	
3	U5MB0018B	(+)0.020"	1	MAIN BEARING KIT	
3	U5MB0018C	(+) 0.030"	1	MAIN BEARING KIT	
4	U5ME0013A	(+) 0.010"	1	BIG END BEARING KIT	
4	U5ME0013B	(+)0.020"	1	BIG END BEARING KIT	
4	U5ME0013C	(+) 0.030"	1	BIG END BEARING KIT	
5	31137312	(+)0.007"	2	THRUST WASHER	
6	31137322	(+)0.007"	2	THRUST WASHER	

ACHR0047

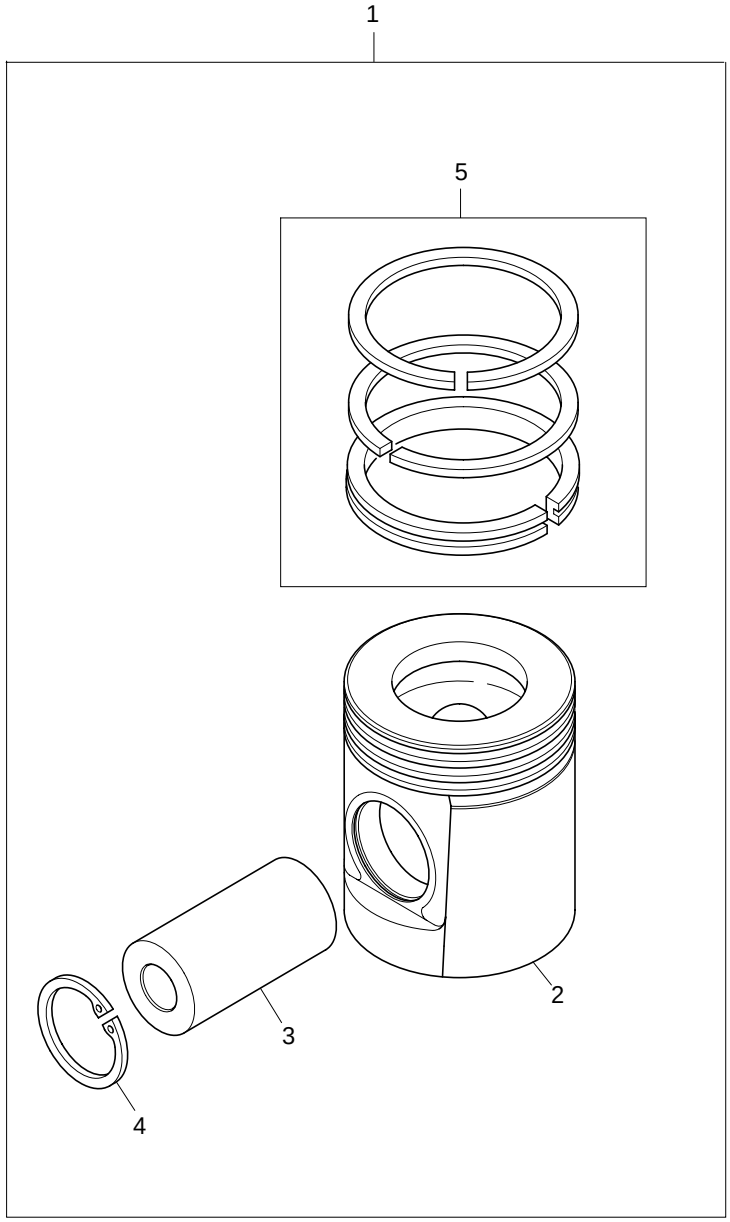

Pistons & Rings	Plate A
	ACHR0047

Item	Part No.	References	Qty.	Description	Notes
1	4115P015		4	PISTON AND RING KIT	
2	├─	⇨ 4115P015	1	PISTON	
3	├─	⇨ 4115P015	1	PISTON PIN	
4	├─ 2721332		2	CIRCLIP	
5	└─ UPRK0002		1	PISTON RING KIT	

ACHR0047

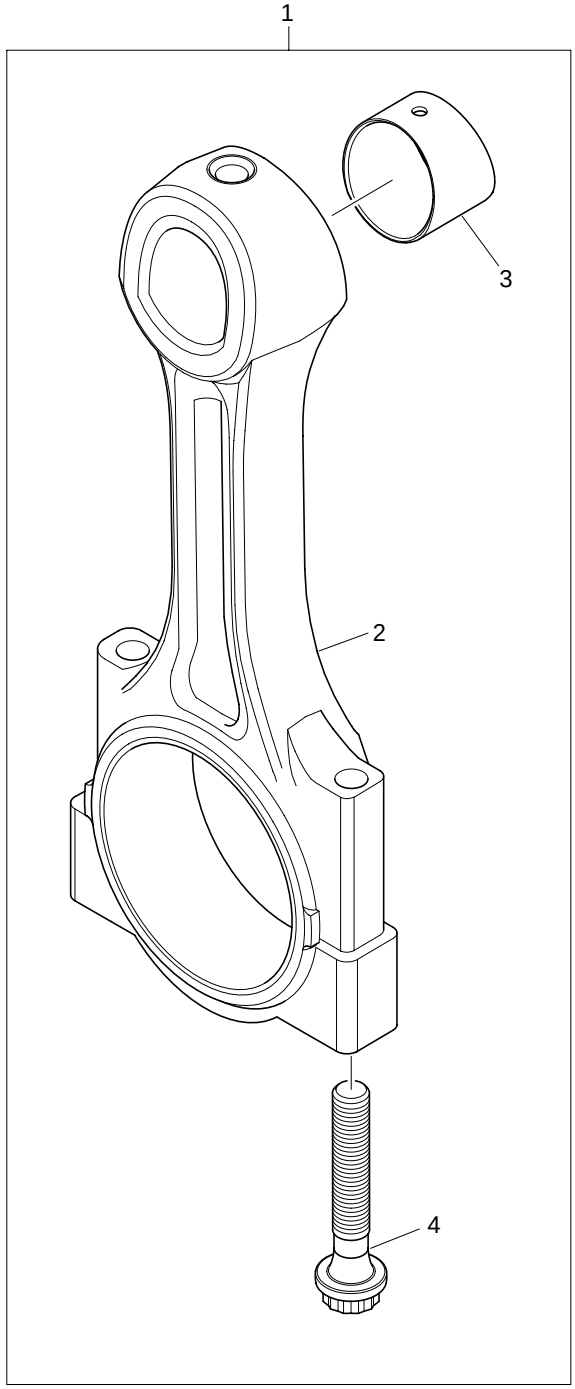

Connecting Rods	Plate A
	ACHR0047

Item	Part No.	References	Qty.	Description	Notes
1		S	4	CONROD KIT	
2	├─	SERVICE OPTION	1	CONROD	
3	├─ 3112A005		1	SMALL END BUSH	
4	└─ 3212V003		2	CON ROD BOLT	
Service Options					
1	4115C311		4	CONROD KIT	GRADE F RED
1	4115C312		4	CONROD KIT	GRADE G ORANGE
1	4115C313		4	CONROD KIT	GRADE H WHITE
1	4115C314		4	CONROD KIT	GRADE J GREEN
1	4115C315		4	CONROD KIT	GRADE K PURPLE
1	4115C316		4	CONROD KIT	GRADE L BLUE

Rear End Oil Seal	Plate A
	ACHR0047

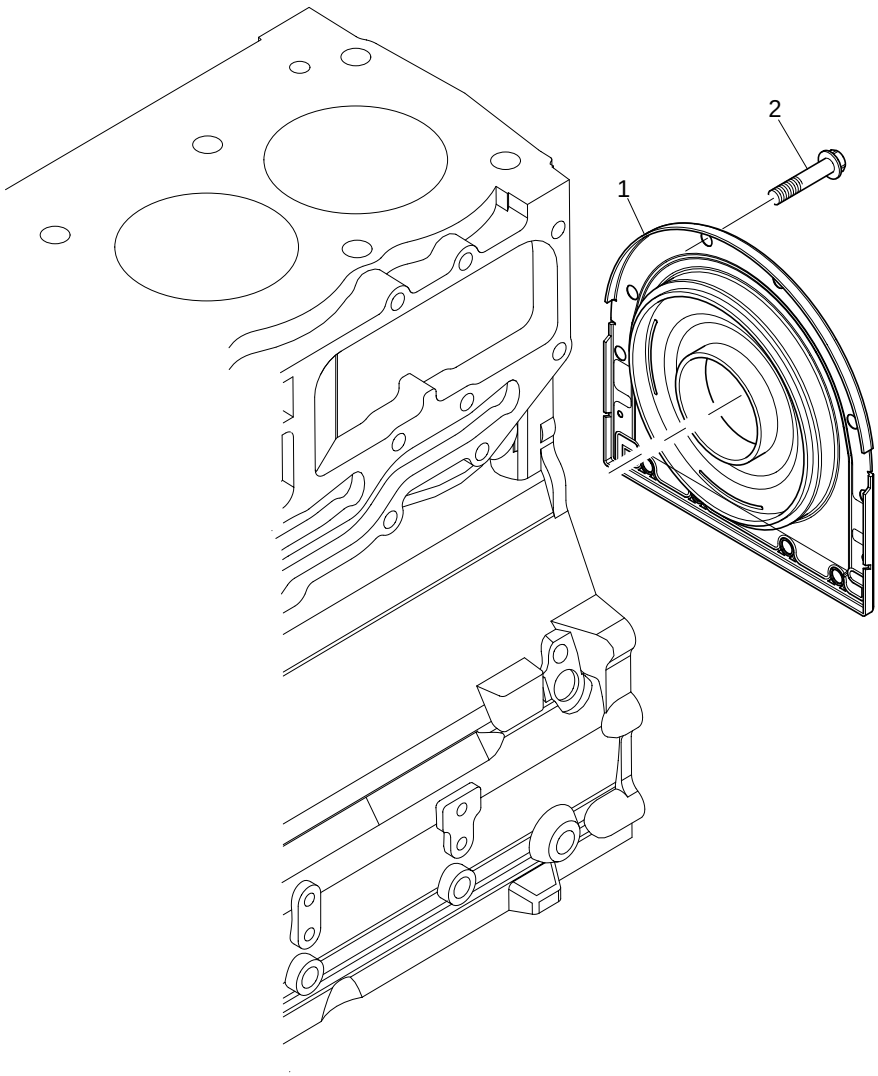

Rear End Oil Seal	Plate A
	ACHR0047

Item	Part No.	References	Qty.	Description	Notes
1	2418F704		1	REAR OIL SEAL HOUSING	
2	3211C002		10	METRIC BOLT	

ACHR0047

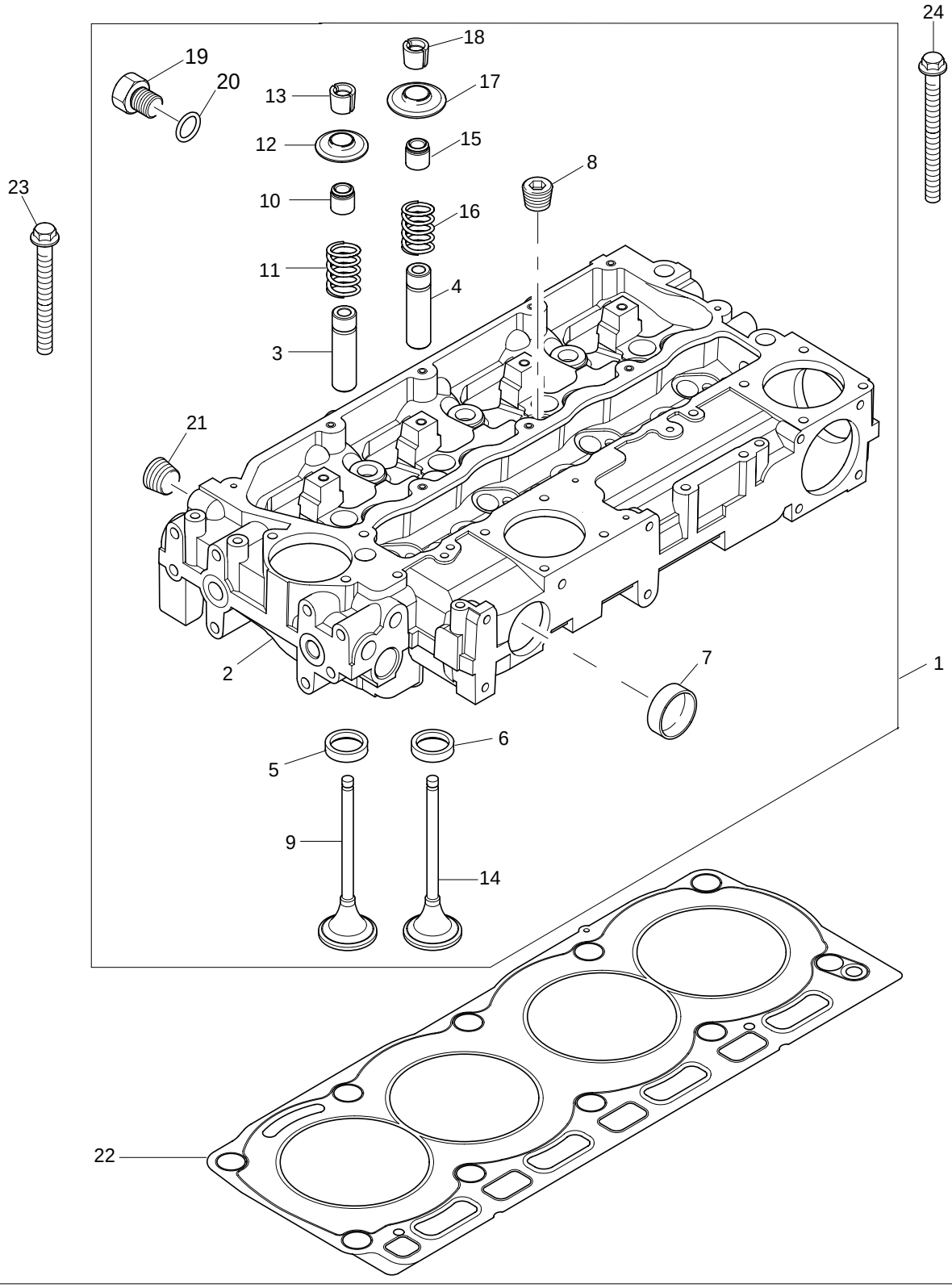

Cylinder Head Assembly	Plate A
	ACHR0047

Item	Part No.	References	Qty.	Description	Notes
1	ZZ80268		1	CYLINDER HEAD KIT	
2	├	ZZ80268	1	CYLINDER HEAD	
3	├ 3313E021		4	VALVE GUIDE	
4	├ 3313E021		4	VALVE GUIDE	
5	├ 3314A151		4	INLET VALVE INSERT	
6	├ 3314A161		4	EXHAUST VALVE INSERT	
7	├ 32416117		2	PLUG	
8	├ 0650588		4	PLUG	
9	├ 3142H071		4	INLET VALVE	
10	├ 2418M514		4	VALVE STEM SEAL	
11	├ 3174A016		4	VALVE SPRING	
12	├ 3342A011		4	VALVE CAP	
13	├ 3142W004		8	COTTER	
14	├ 3142A151		4	EXHAUST VALVE	
15	├ 2418M514		4	VALVE STEM SEAL	
16	├ 3174A016		4	VALVE SPRING	
17	├ 3342A011		4	VALVE CAP	
18	├ 3142W004		8	COTTER	
19	├ 3278A006		1	PLUG	
20	├ 2415H003		1	O RING	
21	└ 2431154		1	PLUG	
22	3681E046	a.	1	CYLINDER HEAD GASKET	
23	3218A011		7	SCREW	
24	3218A012		3	SCREW	

History

a.

22	3681E044		1	CYLINDER HEAD GASKET

ACHR0047

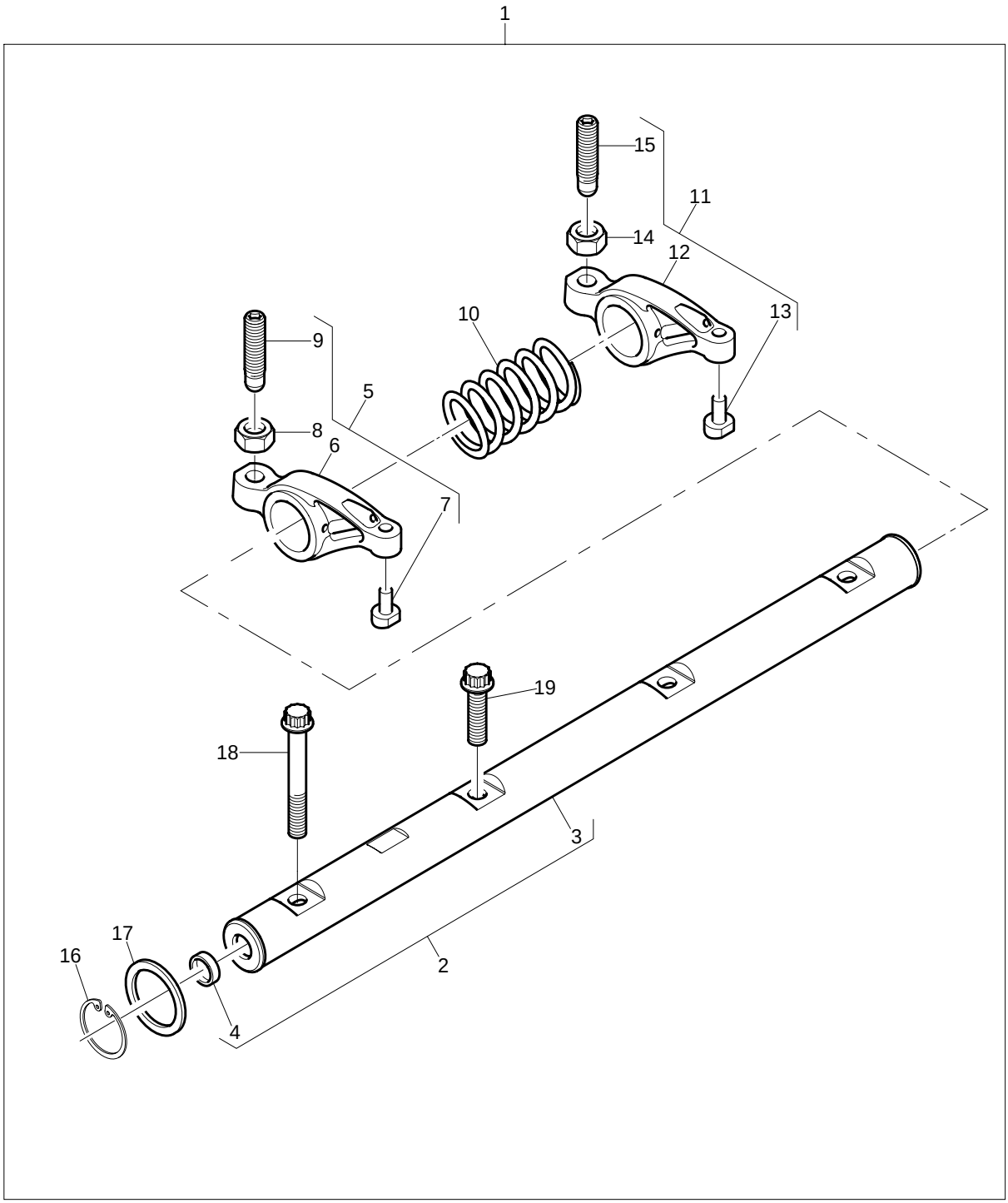

Rocker Shaft Assembly	Plate A
	ACHR0047

Item	Part No.	References	Qty.	Description	Notes
1	4115R612		1	ROCKER ASSEMBLY	
2	4115R703		1	ROCKER SHAFT ASSEMBLY	
3		4115R703	1	ROCKER ARM SHAFT	
4	2485A104		2	PLUG	
5	4115R314		4	ROCKER ARM ASSEMBLY	
6		4115R314	1	ROCKER ARM	
7		4115R314	1	PAD	
8	0576052		1	NUT	
9	32114145		1	SCREW	
10	3174A015		3	ROCKER SHAFT SPRING	
11	4115R315		4	ROCKER ARM ASSEMBLY	
12		4115R315	1	ROCKER ARM	
13		4115R315	1	PAD	
14	0576052		1	NUT	
15	32114145		1	SCREW	
16	2722A022		2	CIRCLIP	
17	2134A502		2	WASHER	
18	2316A901		1	SCREW	
19	2316A902		3	SCREW	

ACHR0047

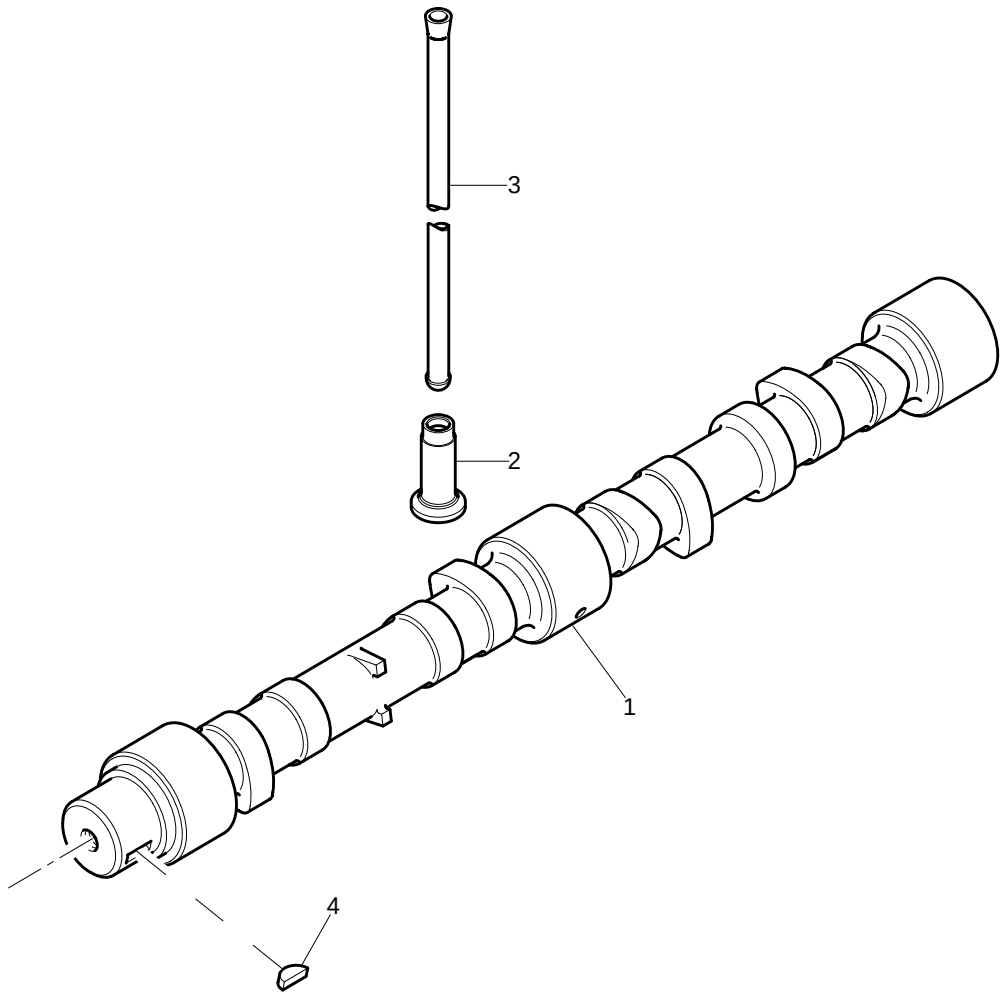

Timing Gear & Camshaft	Plate A
	ACHR0047

Item	Part No.	References	Qty.	Description	Notes
1	3141D222		1	CAMSHAFT	
2	3142U031		8	TAPPET	
3	31434307		8	PUSHROD	
4	0500012		1	WOODRUFF KEY	

AFHR4291

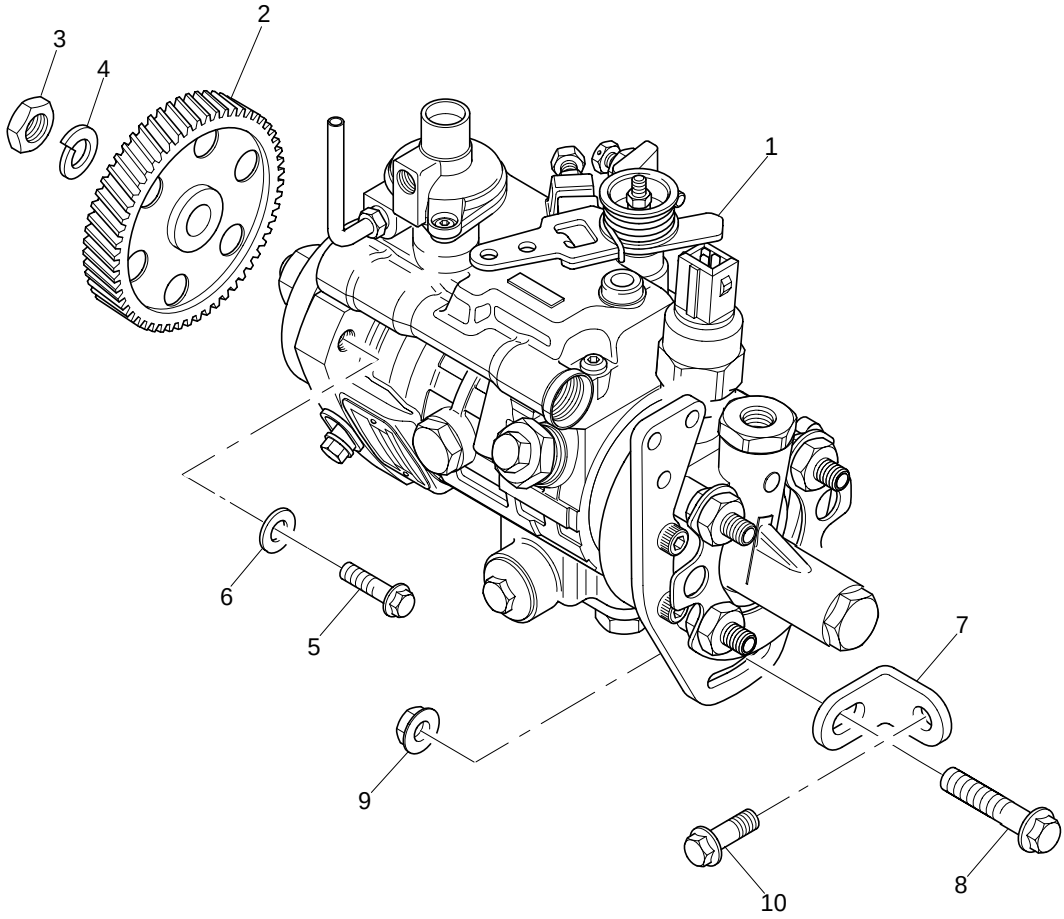

Fuel Injection Pump	Plate A
	AFHR4291

Item	Part No.	References	Qty.	Description	Notes
1	2644H009		1	FUEL INJECTION PUMP	
2	3117L261		1	INJECTION PUMP GEAR	
3	2318A108		1	NUT	
4	K134AF01		1	WASHER	
5	2314H004		3	SCREW	
6	2411D008	a.	3	WASHER	
7	3641A006		1	BRACKET	
8	2314H003		1	SCREW	
9	2318A603		1	NUT	
10	2314J002		1	SCREW	

History

a.

6	2415D001		3	PLAIN WASHER	

High Pressure Fuel Pipes	Plate A
	AFHR4291

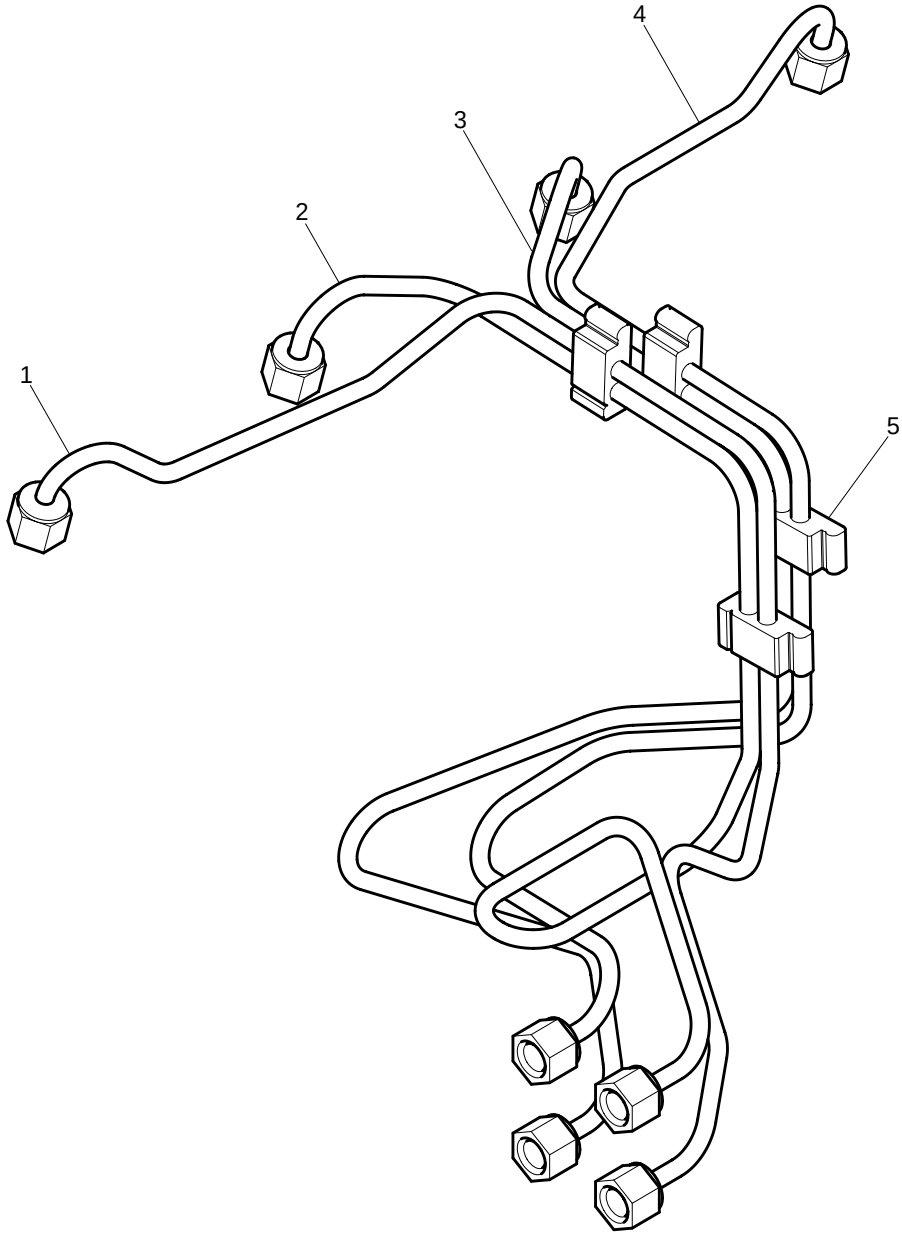

High Pressure Fuel Pipes	Plate A
	AFHR4291

Item	Part No.	References	Qty.	Description	Notes
1	3525A061		1	FUEL INJECTION PIPE - NO 1	
2	3525A062		1	FUEL INJECTION PIPE - NO 2	
3	3525A063		1	FUEL INJECTION PIPE - NO 3	
4	3525A064		1	FUEL INJECTION PIPE - NO 4	
5	2646E017		1	CLIP	

AFHR4291

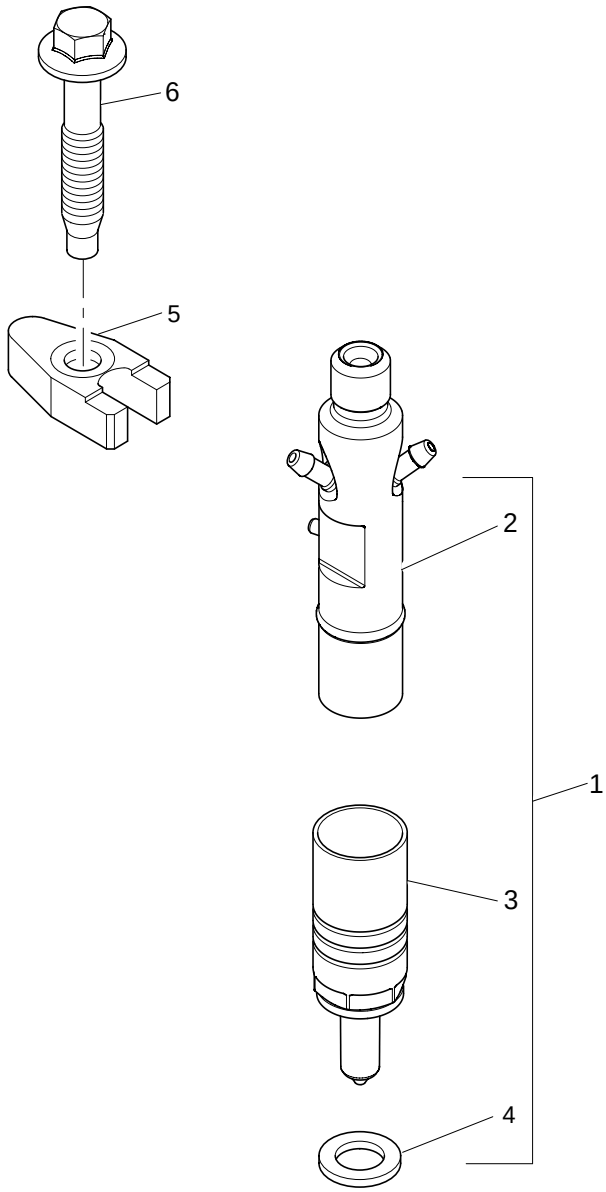

AFHR4291

Item	Part No.	References	Qty.	Description	Notes
1	2645K012		4	ATOMISER	
2	├─	⇨ 2645K012	1	ATOMISER HOLDER	
3	├─ 2645K612		1	NOZZLE	
4	└─ L311FF02		1	INJECTOR WASHER	
5	3751A241	a. b.	4	INJECTOR CLAMP	
6	2314W009	b.	4	SCREW	
History					
a.					
5	3751A231		4	INJECTOR CLAMP	
b.					
5	3274A004		4	INJECTOR CLAMP	
6	2314W008		4	SCREW	

AFHR4291

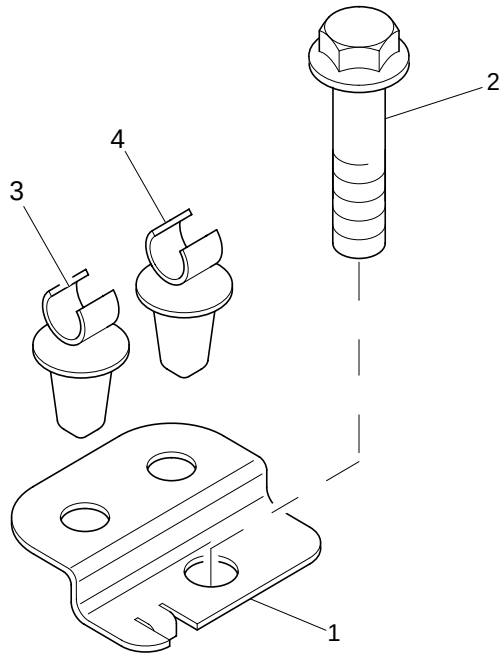

Throttle & Stop Controls	Plate A
	AFHR4291

Item	Part No.	References	Qty.	Description	Notes
1	3651A016		1	SUPPORT BRACKET	
2	2314H002		1	SCREW	
3	2481D558		1	CLIP	
4	2481D556		1	CLIP	

Pick-Up Sensor	Plate A
	AFHR4291

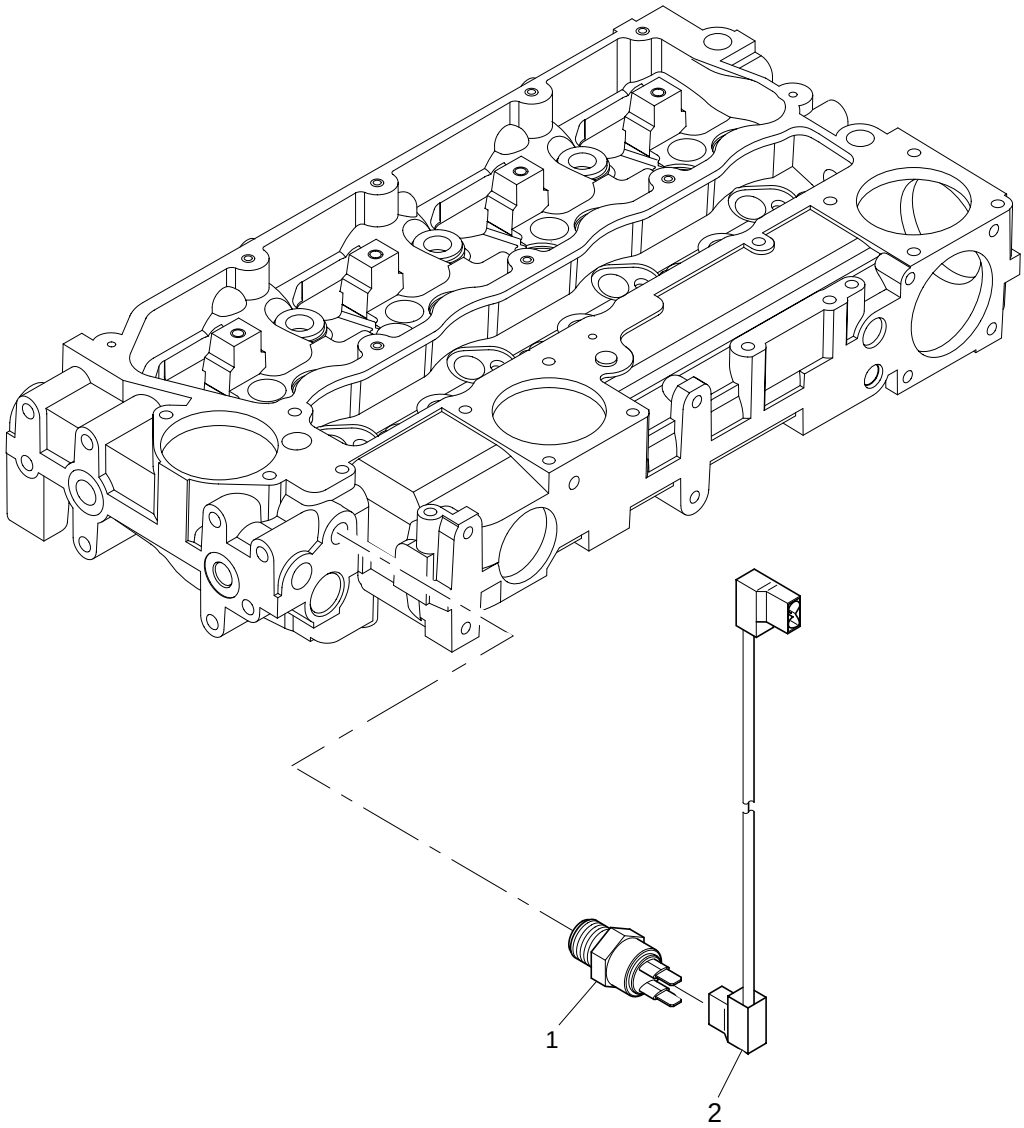

Pick-Up Sensor	Plate A
	AFHR4291

Item	Part No.	References	Qty.	Description	Notes
1	2848A127		1	SENDER	
2	3161C017		1	CABLE	
History					
a.					
	3278A005		1	PLUG	
	2415H001		1	O RING	
	3278A006		1	PLUG	
	2415H003		1	O RING	

Pick-Up Sensor	Plate B
	AFHR4291

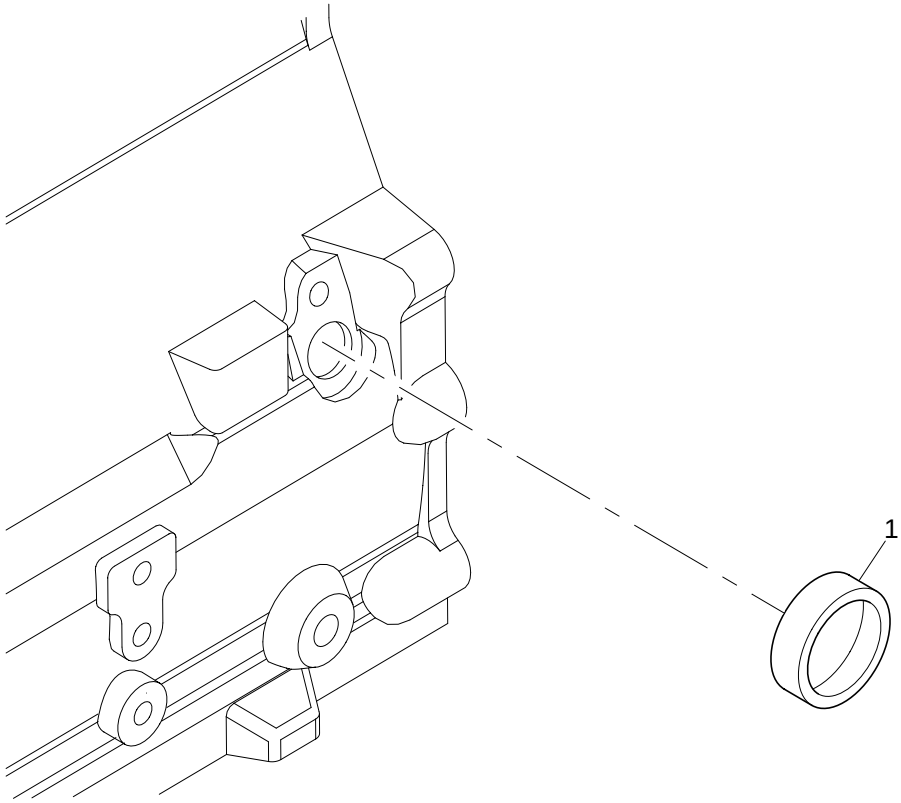

Pick-Up Sensor	Plate B
	AFHR4291

Item	Part No.	References	Qty.	Description	Notes
1	2485A109		1	CORE PLUG	

Boost Control Pipe	Plate A
	AFHR4291

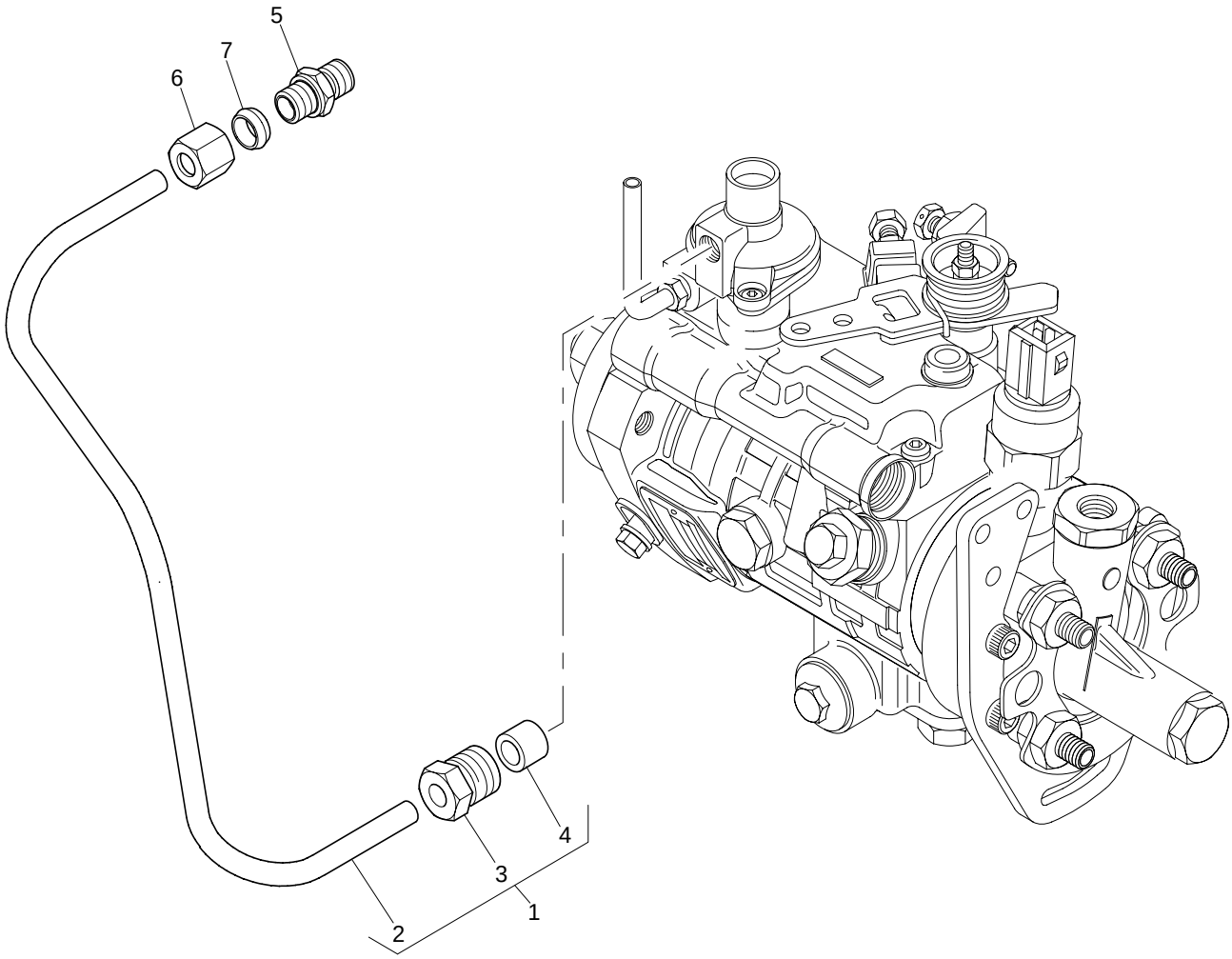

Boost Control Pipe	Plate A
	AFHR4291

Item	Part No.	References	Qty.	Description	Notes
1	4121A058		1	BOOST CONTROL PIPE	
2	├─	⇨ 4121A058	1	BOOST CONTROL PIPE	
3	├─ 3353D004		1	UNION NUT	
4	└─ 33811112		1	OLIVE	
5	0206002		1	UNION	
6	0576111		1	NUT	
7	0566002		1	OLIVE	

Fuel Leak-Off Pipe	Plate A
	AFHR4291

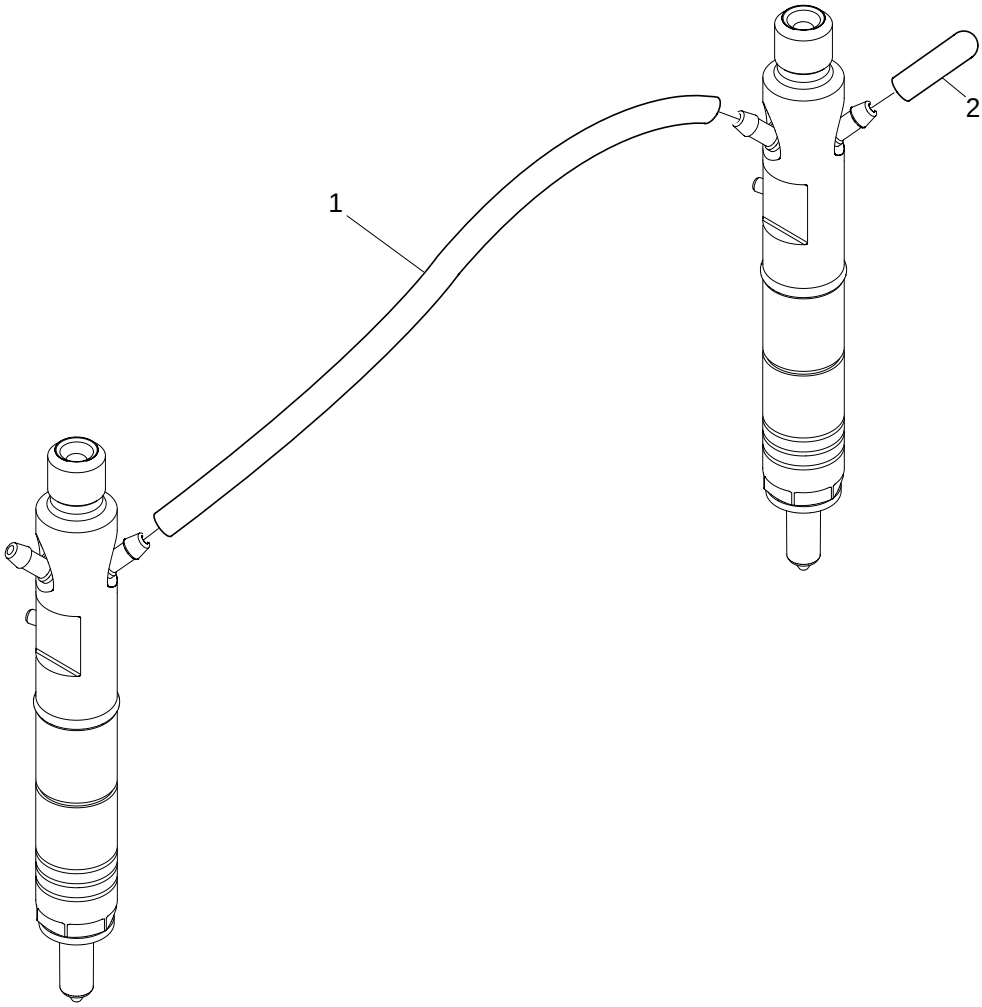

Fuel Leak-Off Pipe	Plate A
	AFHR4291

Item	Part No.	References	Qty.	Description	Notes
1	2646F501		3	FLEXIBLE HOSE	
2	2646E501		1	CAP	

Flywheel Housing	Plate A
	CDHR1043

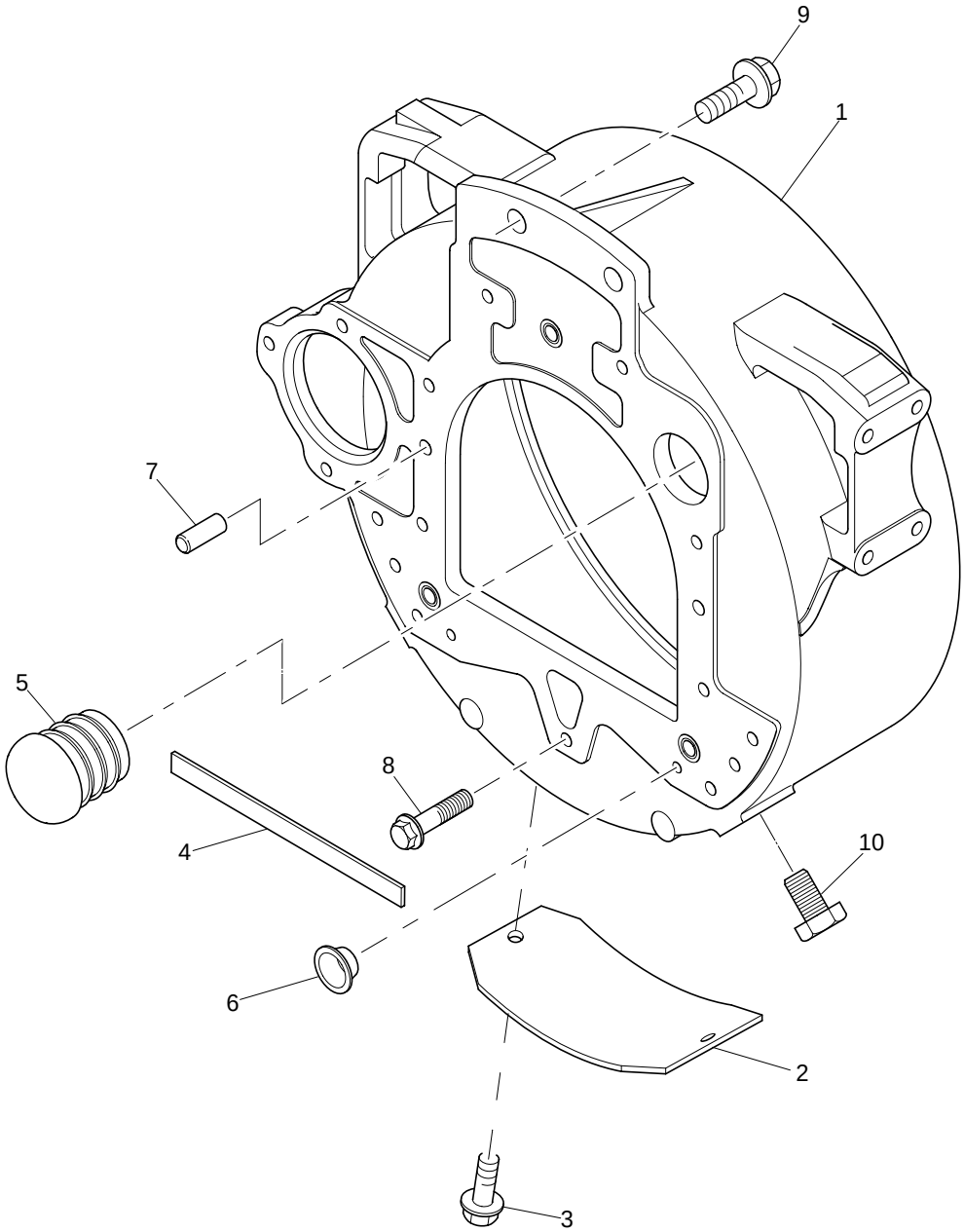

Flywheel Housing	Plate A
	CDHR1043

Item	Part No.	References	Qty.	Description	Notes
1	3713M049		1	FLYWHEEL HOUSING	
2	36212132		1	PLATE	
3	2314H102		2	SCREW	
4	36843154		1	SEAL	
5	2487A452		1	BLANKING PLUG	
6	2487204		3	PLUG	
7	0350025		2	DOWEL	
8	2314J204		6	SCREW	
9	2314J603		2	SCREW	
10	2487Y005		2	PLUG	

Flywheel & Starter Ring	Plate A
	DDHR0840

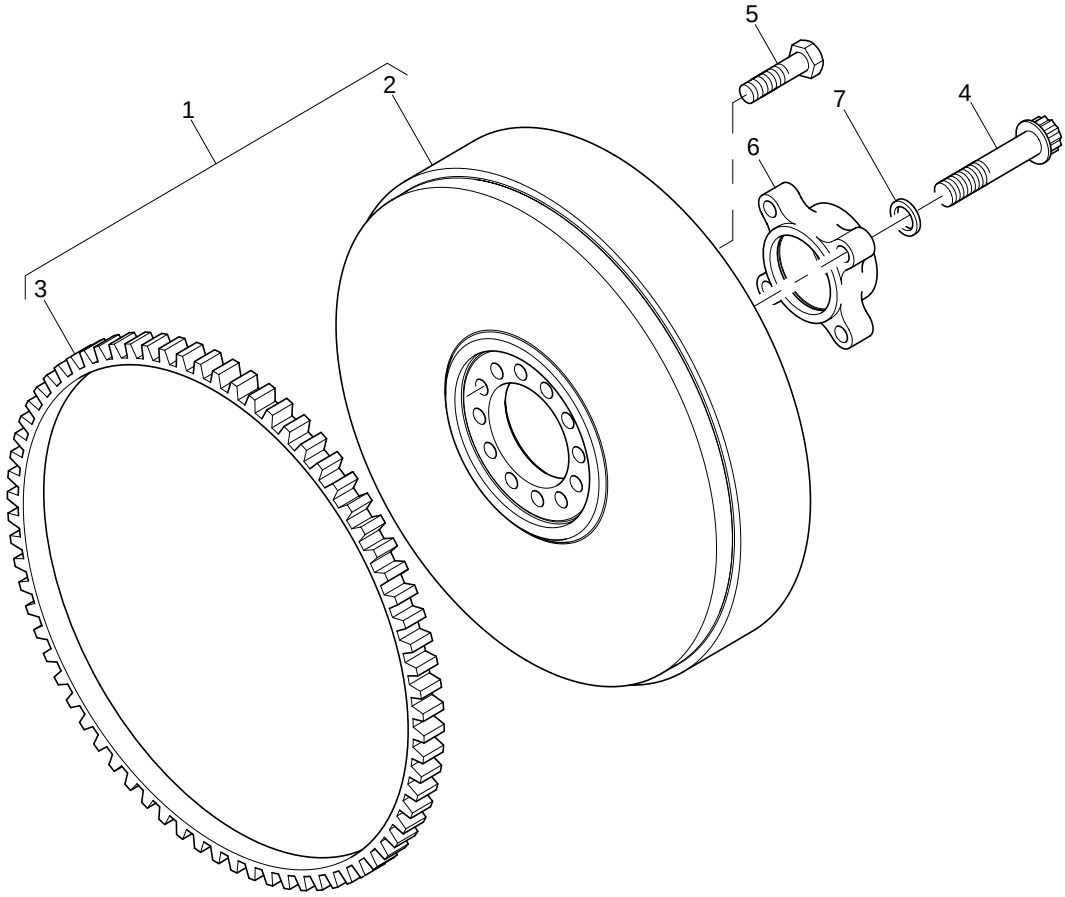

Flywheel & Starter Ring	Plate A
	DDHR0840

Item	Part No.	References	Qty.	Description	Notes
1	4111D128		1	FLYWHEEL ASSEMBLY	
2	├─	⇨ 4111D128	1	FLYWHEEL	
3	└─ 31162121		1	STARTER RING GEAR	
4	2172175		4	SCREW	
5	0096803		6	SCREW	
6	3743H011		1	HOUSING	
7	33117127		6	WASHER	

Starter Motor	Plate A
	EDHR0847

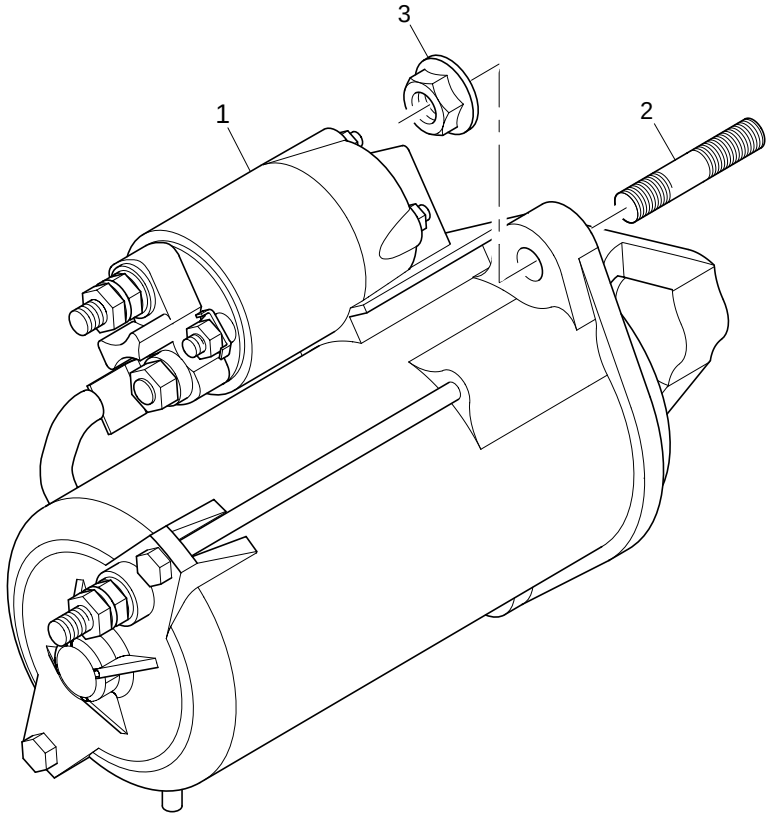

Starter Motor	Plate A
	EDHR0847

Item	Part No.	References	Qty.	Description	Notes
1	2873K404		1	STARTERMOTOR	(A)
2	2313C078		3	STUD	
3	2318A604		3	NUT	

Footnotes	
(A)	BREAKDOWN HAS YET TO BE ADVISED

Fan Drive	Plate A
	FBHR0871

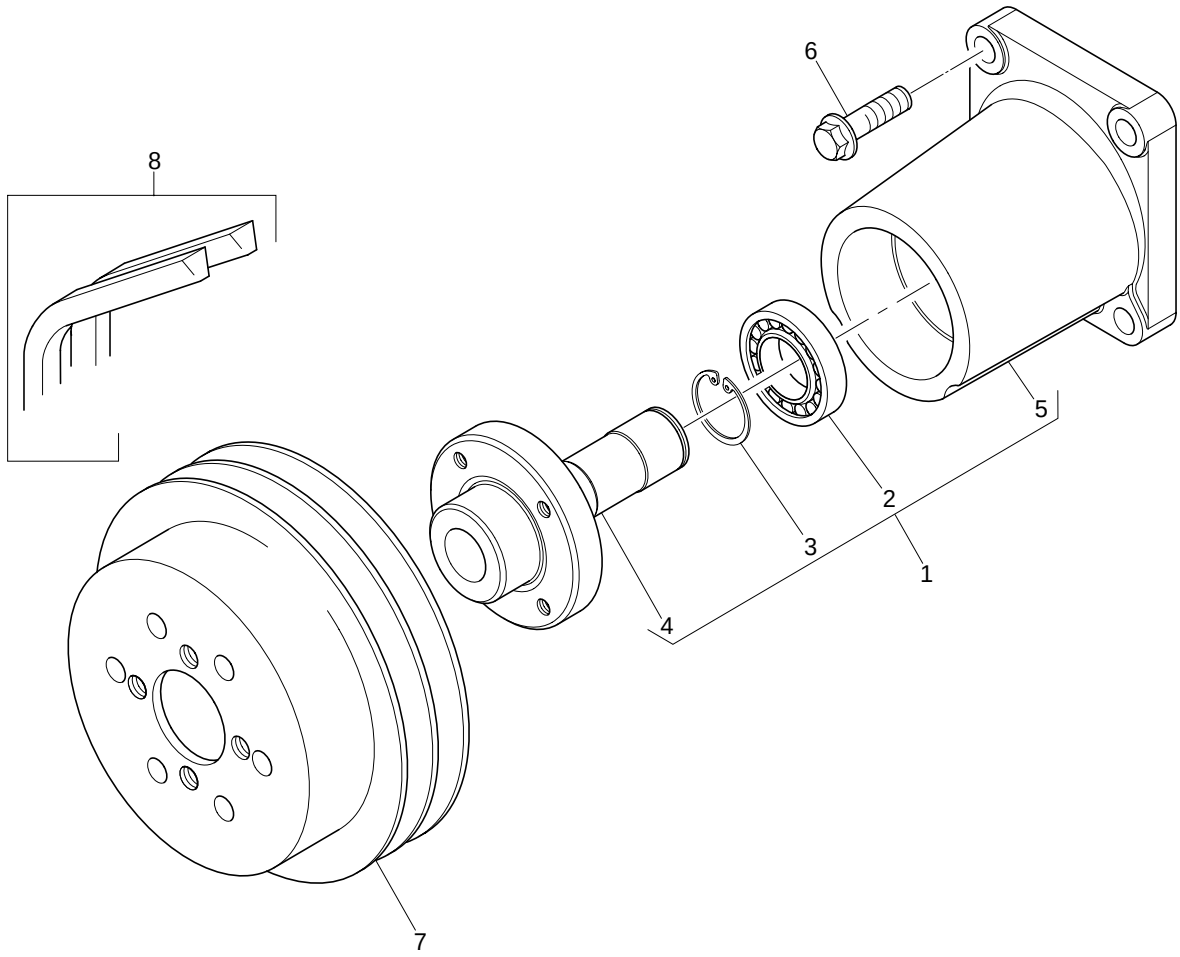

Fan Drive	Plate A
	FBHR0871

Item	Part No.	References	Qty.	Description	Notes
1	4113K005		1	FAN DRIVE HOUSING	
2	├─	⇨ 4113K005	2	BALL BEARING	
3	├─ 2722A022	⇨ 4113K005	2	CIRCLIP	
4	├─	⇨ 4113K005	1	HUB	
5	└─	⇨ 4113K005	1	FAN DRIVE HOUSING	
6	2314J005		4	SCREW	
7	3115C111		1	FAN PULLEY	
8	2614B656		1	FANBELT	(A)

Footnotes

(A)	SERVICED IN PAIRS

GBHR2322

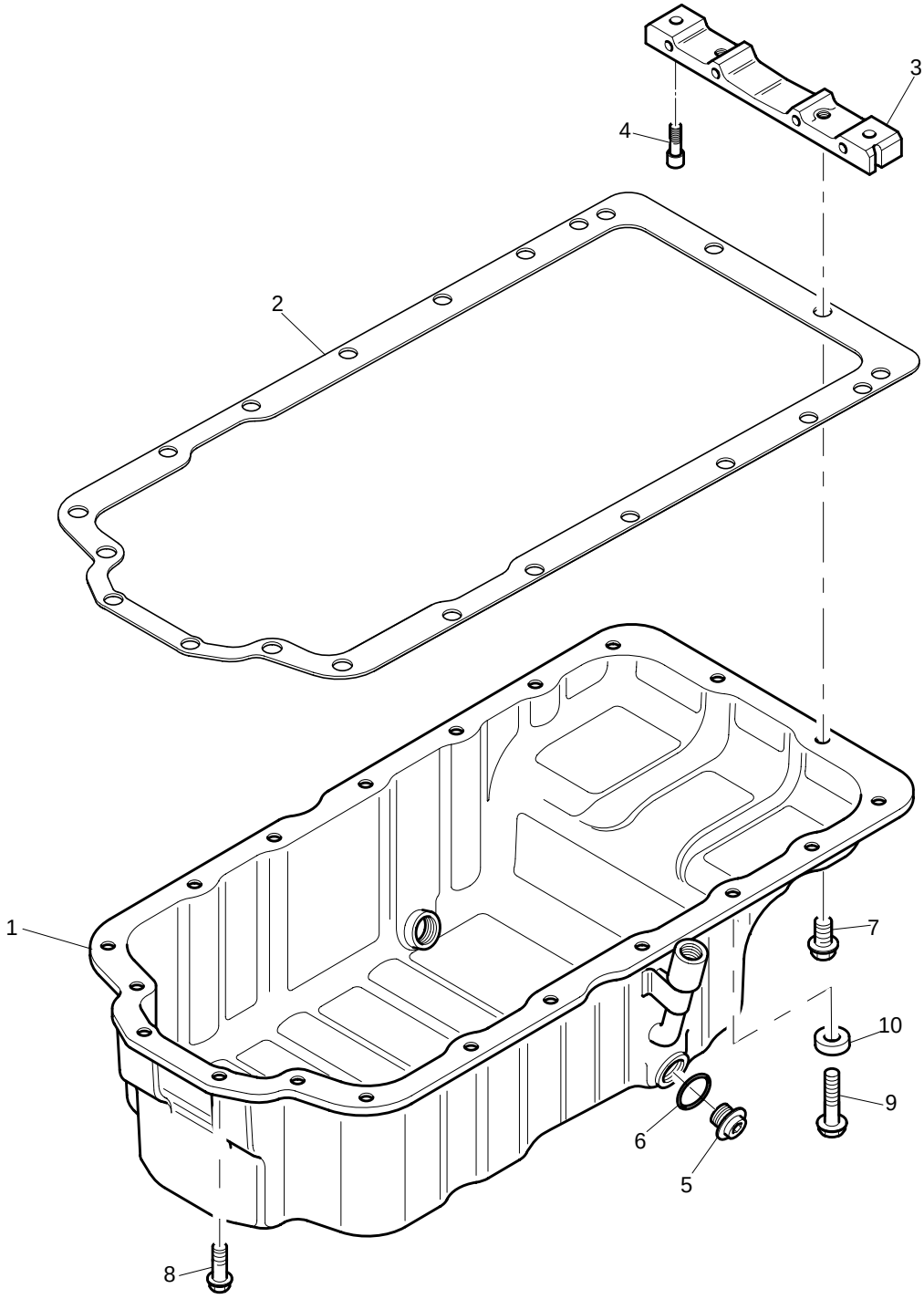

Sump	Plate A
	GBHR2322

Item	Part No.	References	Qty.	Description	Notes
1	3717Y061		1	SUMP	
2	3681K037		1	SUMP JOINT	
3	3627P041		1	BRIDGE PIECE	
4	2311D039		2	SCREW	
5	32186405		2	PLUG	
6	2415715		2	O RING	
7	2314H031		2	SCREW	
8	2314H002		17	SCREW	
9	2314H003		1	SCREW	
10	33134418		1	SPACER	

Dipstick & Filler Tube	Plate A
	GBHR2322

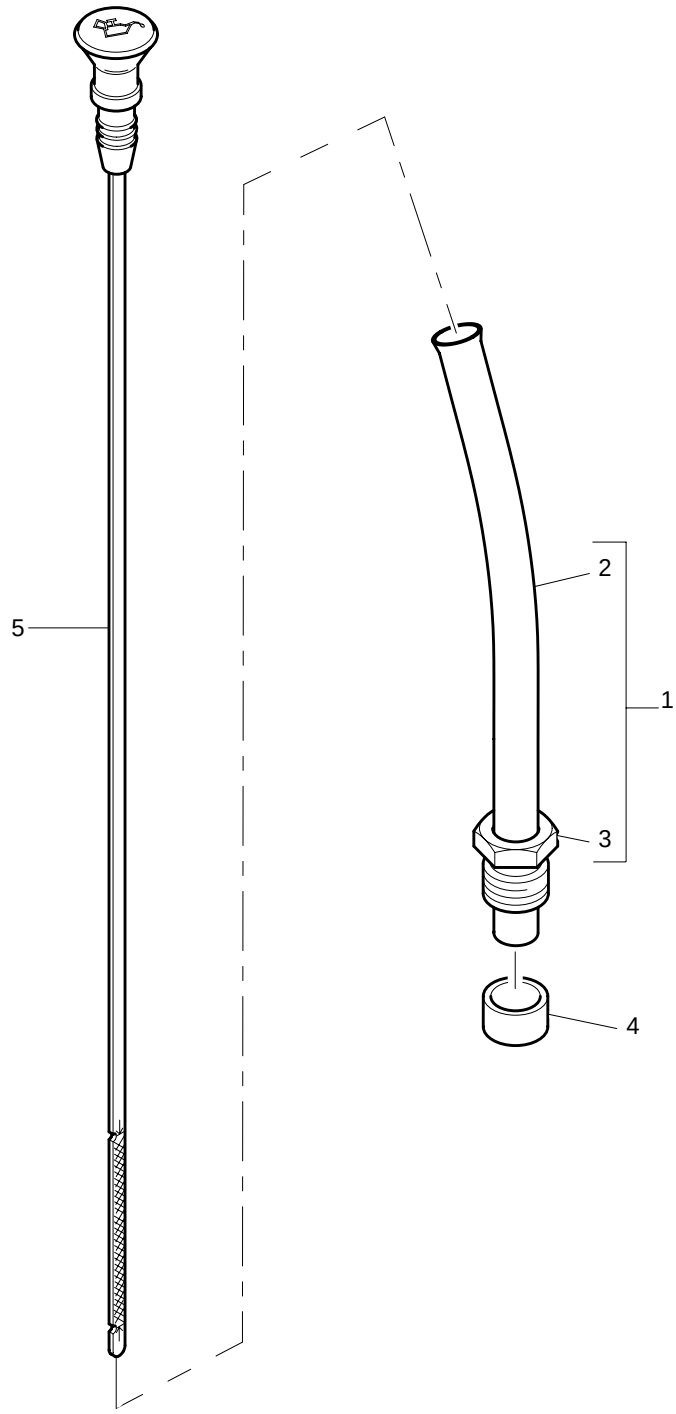

Dipstick & Filler Tube	Plate A
	GBHR2322

Item	Part No.	References	Qty.	Description	Notes
1	3577A125		1	TUBE ASSEMBLY	
2	├─	⇨ 3577A125	1	TUBE	
3	└─ 3353D005		1	NUT	
4	33812116		1	OLIVE	
5	3178C077		1	DIPSTICK	

Oil Strainer	Plate A
	GBHR2322

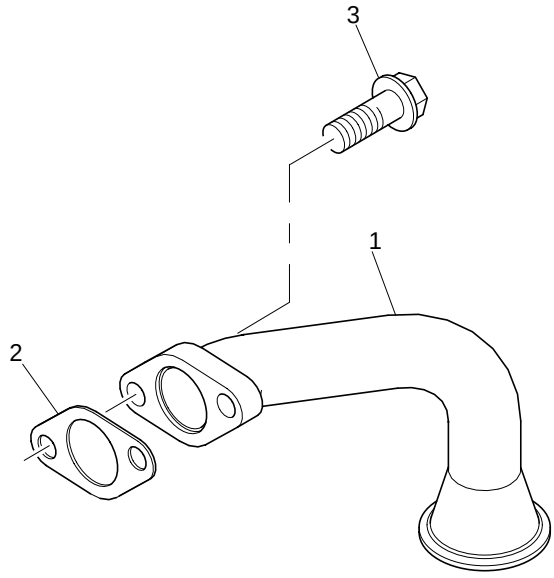

Oil Strainer	Plate A
	GBHR2322

Item	Part No.	References	Qty.	Description	Notes
1	3575A059		1	SUCTION PIPE	
2	36832137		1	JOINT	
3	2314H004		2	SCREW	

HBHR2782

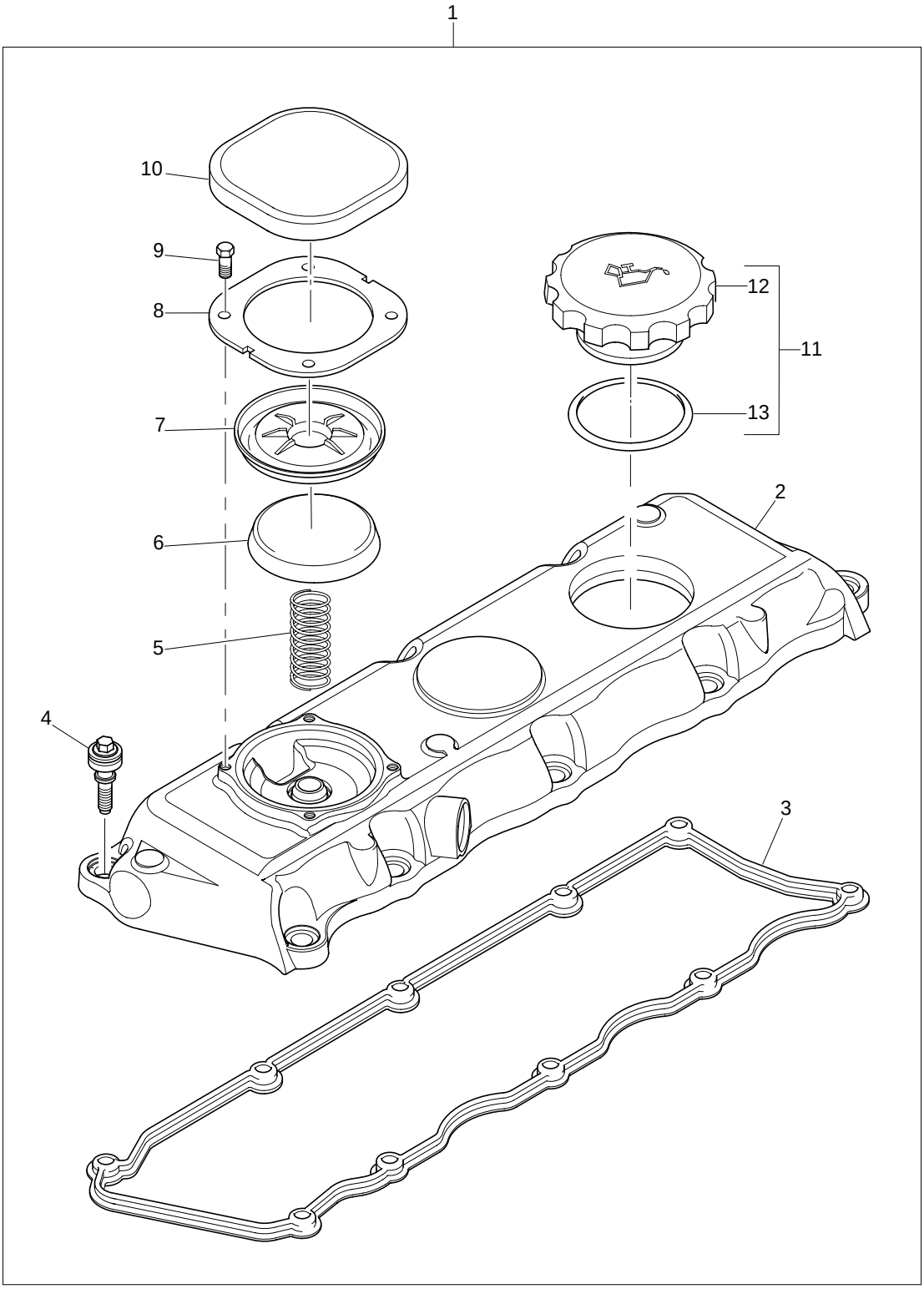

Cylinder Head Cover	Plate A
	HBHR2782

Item	Part No.	References	Qty.	Description	Notes
1	4142X293		1	CYLINDER HEAD COVER ASSY	
2	├─	⇨ 4142X293	1	CYLINDER HEAD COVER	
3	├─ 3681A055		1	ROCKER COVER JOINT	
4	├─ 2161A011		10	SCREW	
5	├─ 3174A017		1	SPRING	
6	├─ 3788A002		1	CAP	
7	├─ 3789A001		1	DIAPHRAGM	
8	├─ 3615A009		1	COVER PLATE	
9	├─ 2151A001		4	SCREW	
10	├─ 3788A003		1	CAP	
11	└─ 4142X099		1	OIL FILLER CAP	
12	│ ├─	⇨ 4142X099	1	OIL FILLER CAP	
13	│ └─ 2415A131		1	O RING	

HBHR2782

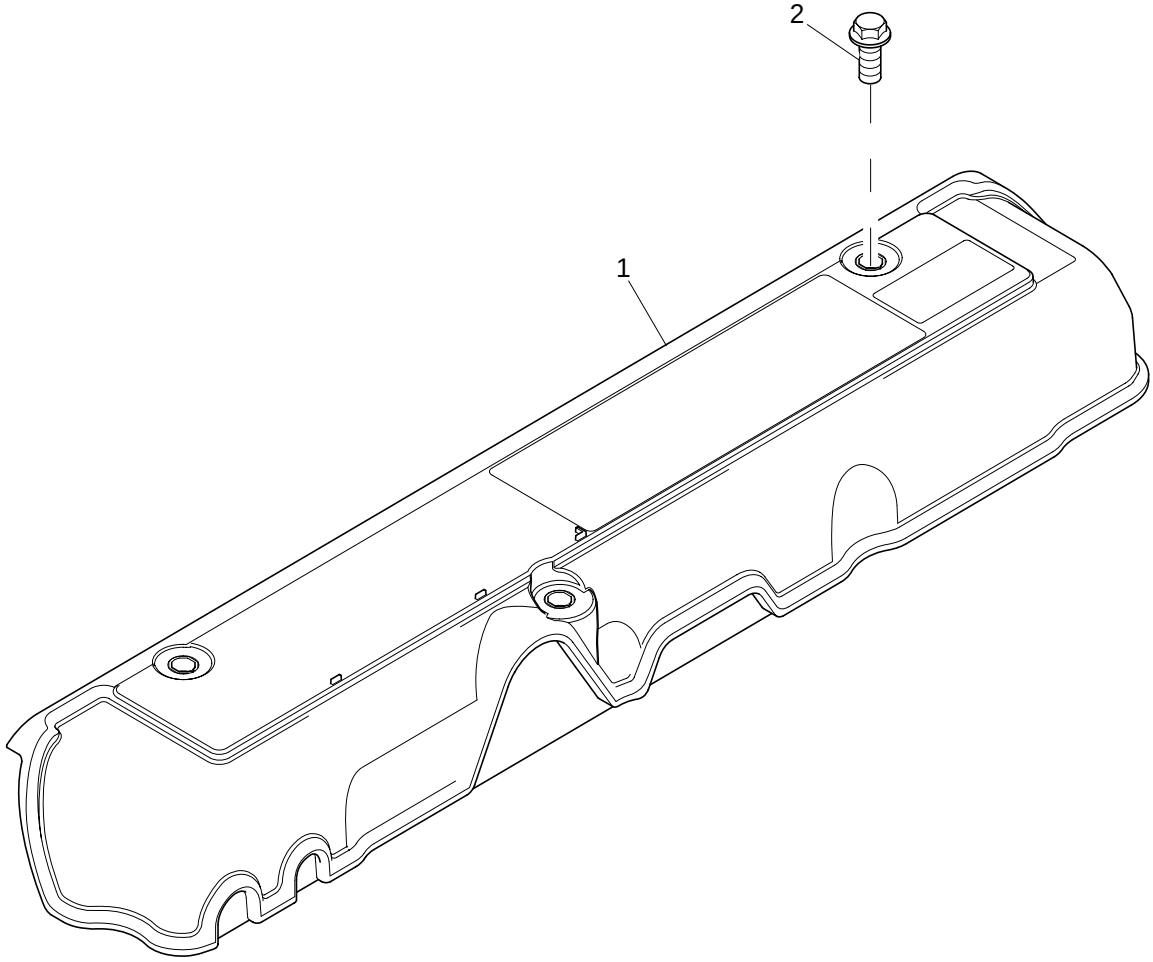

Cylinder Head Cover	Plate B
	HBHR2782

Item	Part No.	References	Qty.	Description	Notes
1	3788N003		1	COVER	
2	2314F003		3	SCREW	

Breather	Plate A
	HBHR2782

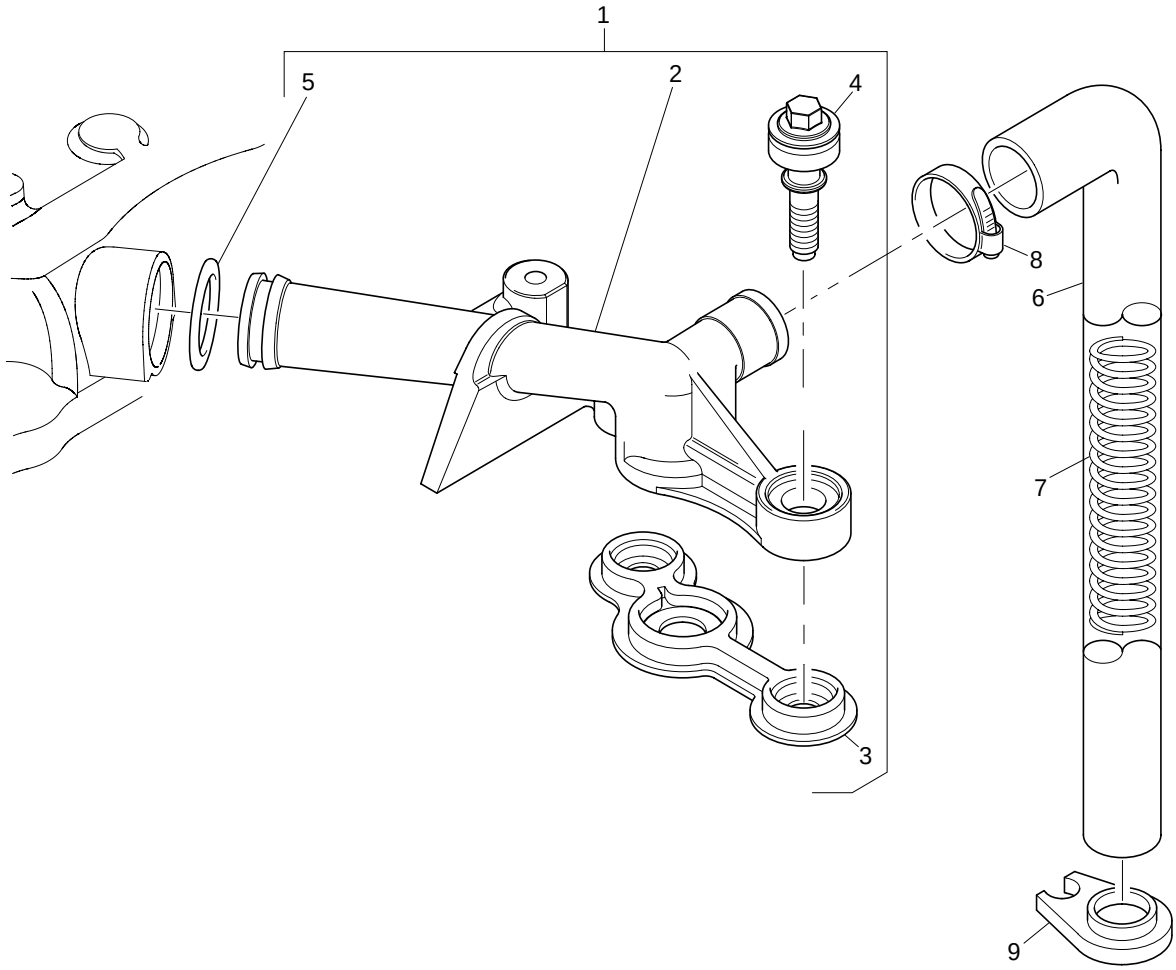

Breather	Plate A
	HBHR2782

Item	Part No.	References	Qty.	Description	Notes
1	4134K015		1	BREATHER PIPE	
2	├─	⇨ 4134K015	1	BREATHER PIPE	
3	├─ 3688A038		1	JOINT	
4	├─ 2161A011		2	SCREW	
5	└─ 2415A068		1	O RING	
6	33872632		1	HOSE	
7	3175P003		1	SPRING	
8	2481877		1	HOSE CLIP	
9	36241123		1	SUPPORT BRACKET	

HBHR2782

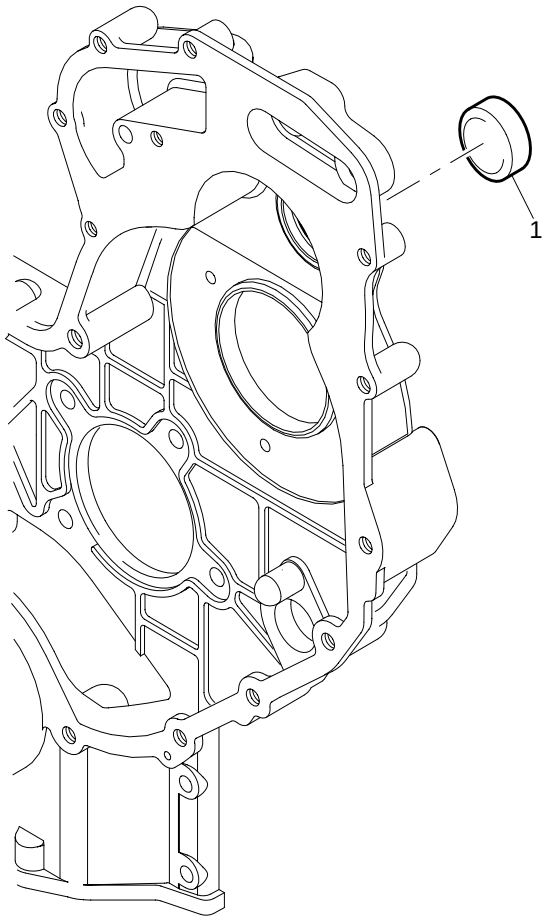

Blanking Plates	Plate A
	HBHR2782

Item	Part No.	References	Qty.	Description	Notes
1	2485A124		1	CUP PLUG	

JBHR2346

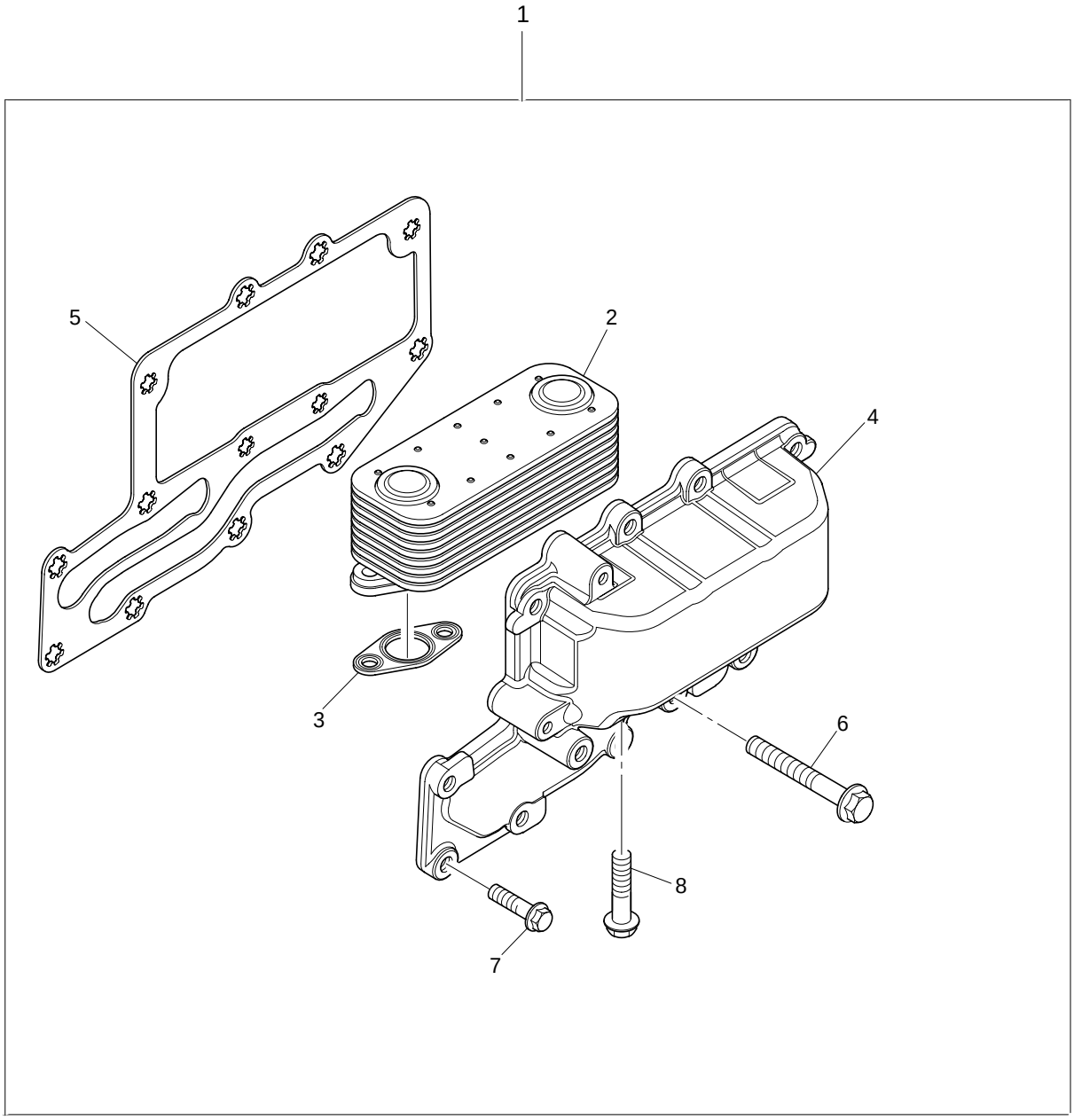

Oil Cooler	Plate A
	JBHR2346

Item	Part No.	References	Qty.	Description	Notes
1	4134W001		1	OIL COOLER	
2	├─ 2486A217		1	OIL COOLER	
3	├─ 3685A025		2	JOINT	
4	├─	⇨ 4134W001	1	COOLER	
5	├─ 3685A024		1	JOINT	
6	├─ 2314K161		3	SCREW	
7	├─ 2314H004		10	SCREW	
8	└─ 2314H006		4	SCREW	

JBHR2346

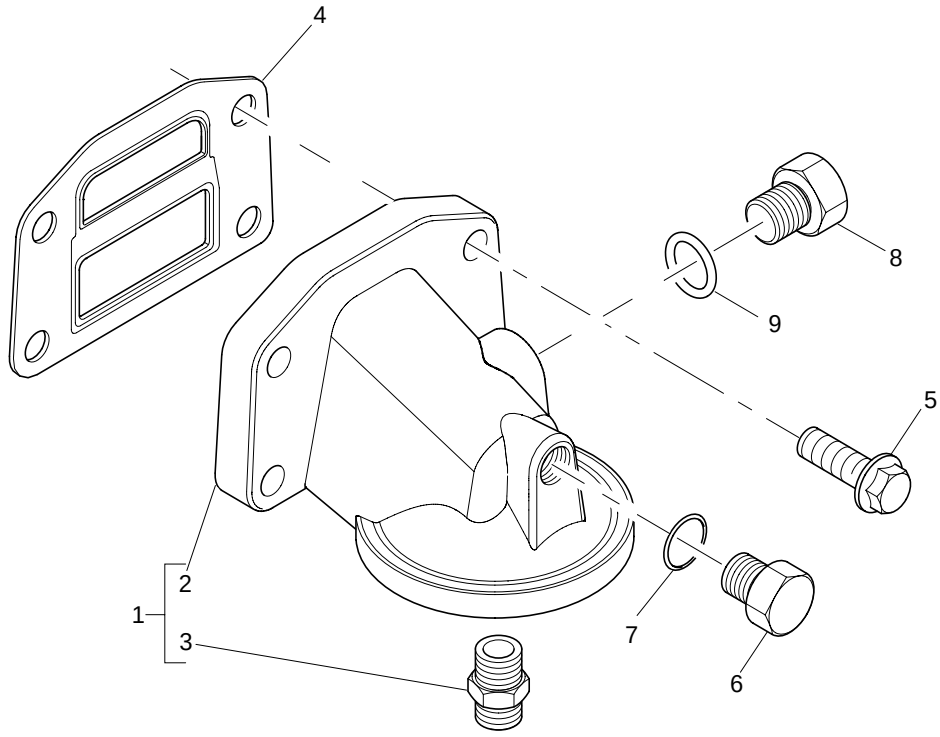

Oil Filter	Plate A
	JBHR2346

Item	Part No.	References	Qty.	Description	Notes
1	4134E058		1	OIL FILTER HEAD	
2	├─	⇨ 4134E058	1	OIL FILTER HEAD	
3	└─ 33554128		1	CONNECTION	
4	3688A039		1	JOINT	
5	2314H034		4	SCREW	
6	3278A007		1	PLUG	
7	2415H009		1	O RING	
8	3278A004		1	PLUG	
9	2415H002		1	O RING	

Blanking Plates	Plate A
	JBHR2346

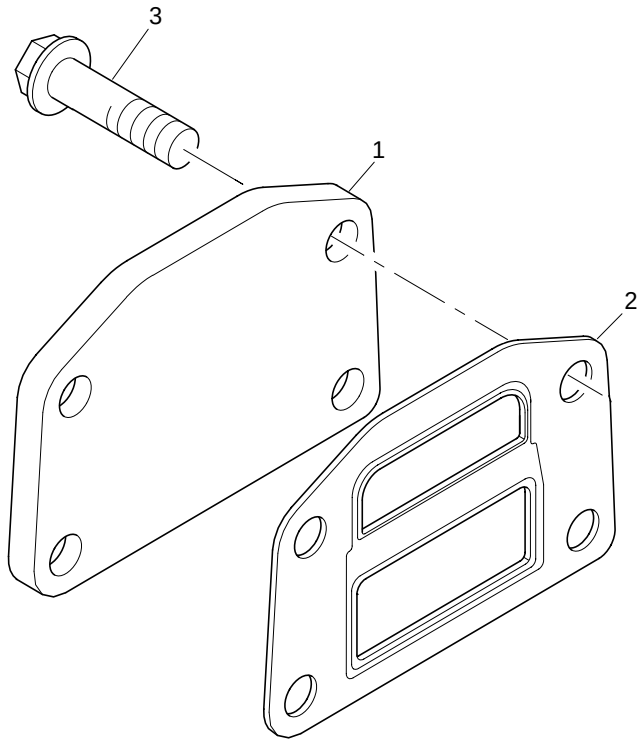

Blanking Plates	Plate A
	JBHR2346

Item	Part No.	References	Qty.	Description	Notes
1	3623A009		1	BLANKING PLATE	
2	3688A039		1	JOINT	
3	2314H033		4	SCREW	

JDHR0023

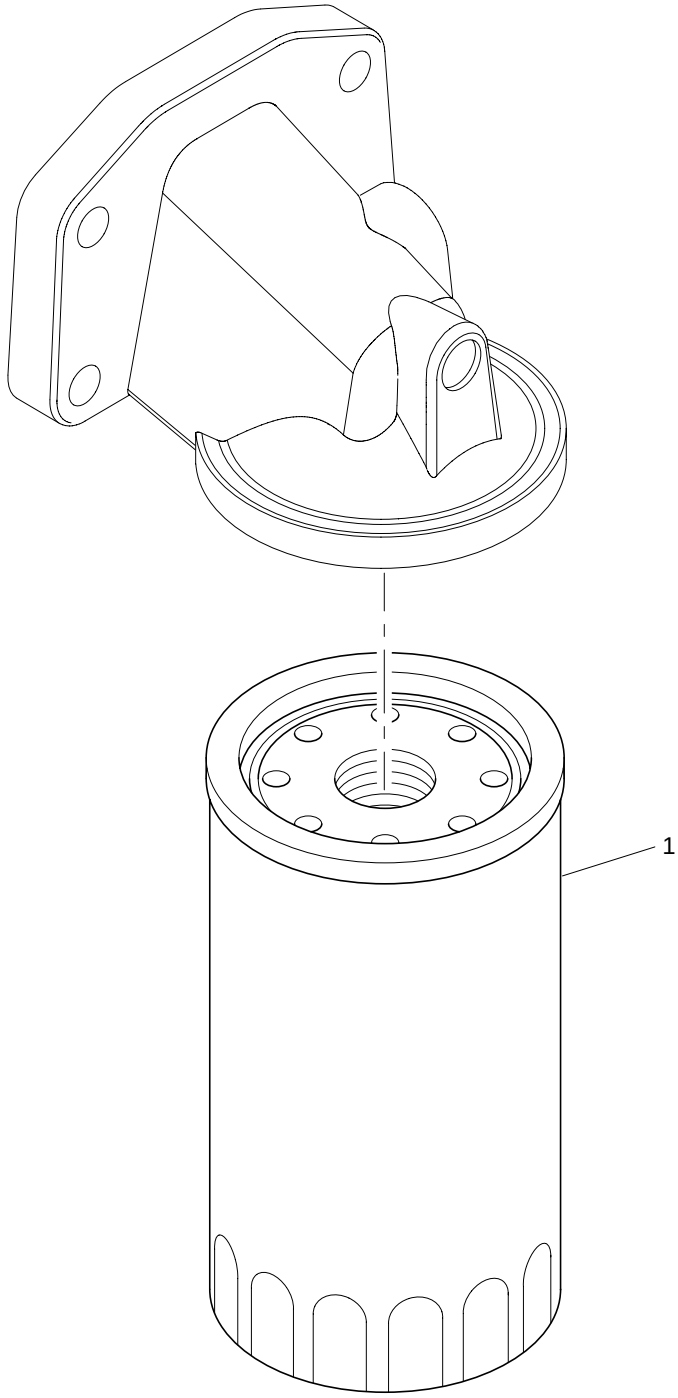

Remote Lubricating Oil Cooler	Plate A
	JDHR0023

Item	Part No.	References	Qty.	Description	Notes
1	2654407		1	OIL FILTER	

KBHR0535

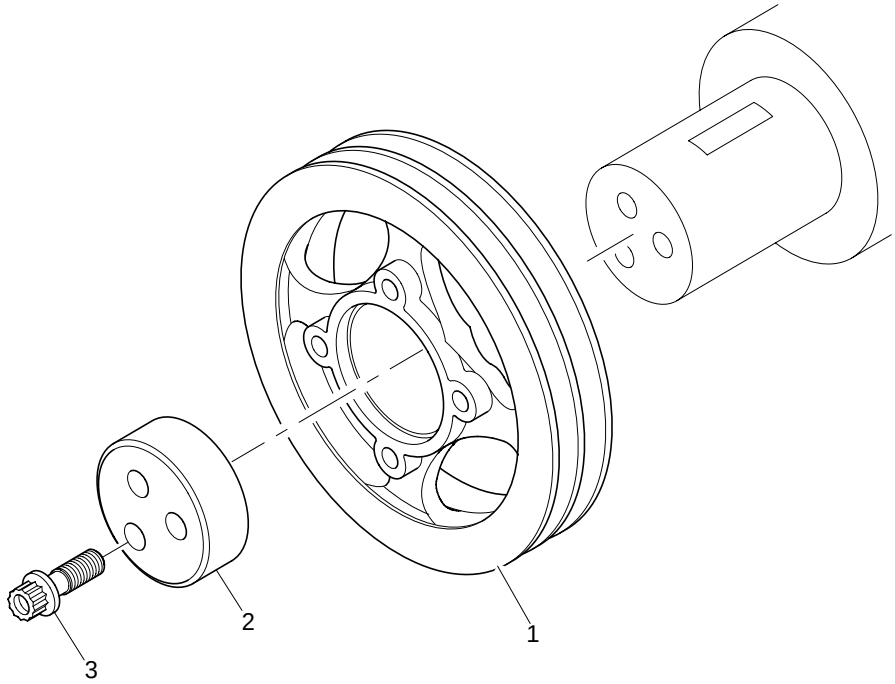

Front End Drive Input	Plate A
	KBHR0535

Item	Part No.	References	Qty.	Description	Notes
1	3115T051		1	CRANKSHAFT PULLEY	
2	3241N001		1	BLOCK	
3	32186137		3	BOLT	

LBHR2253

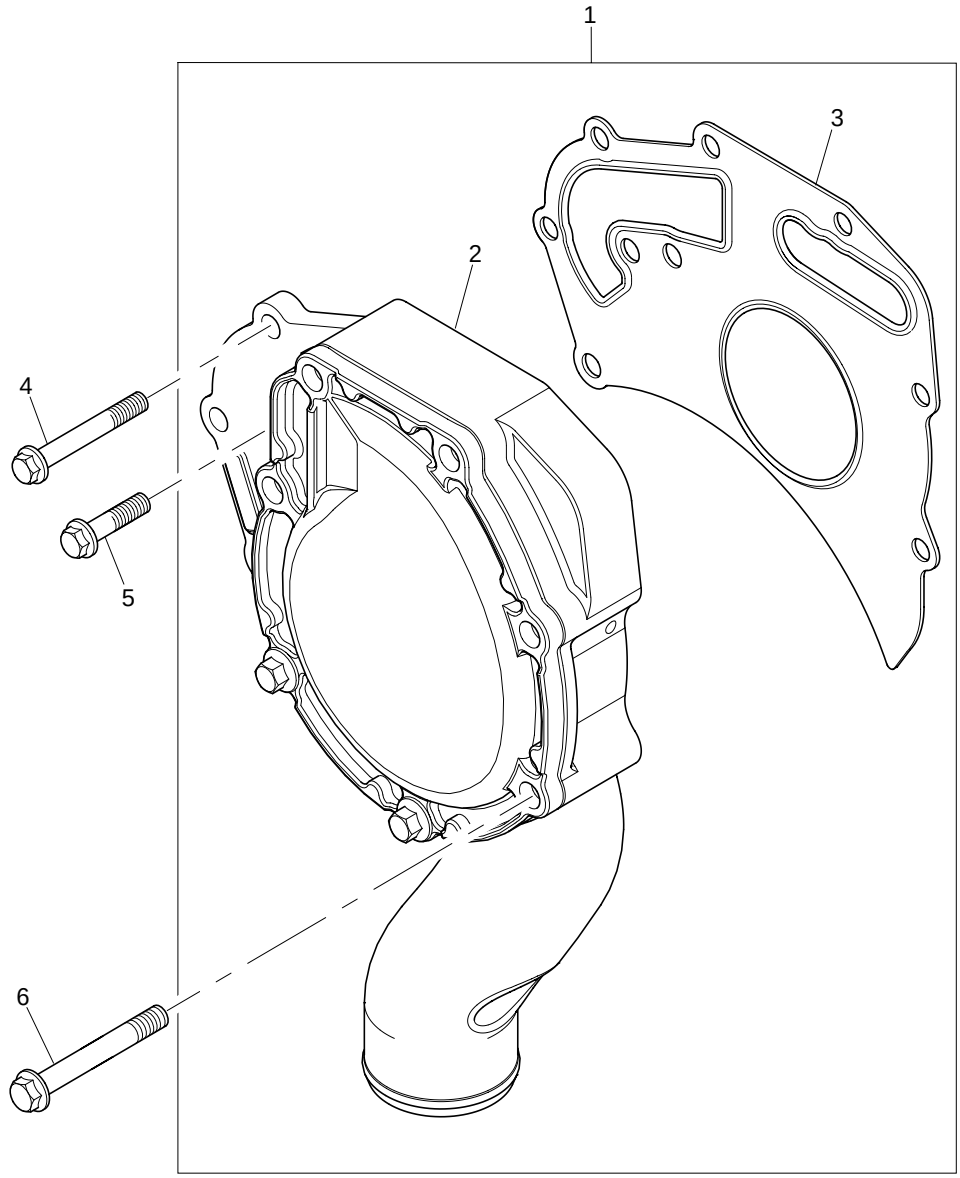

Water Pump	Plate A
	LBHR2253

Item	Part No.	References	Qty.	Description	Notes
1	U5MW0194		1	WATER PUMP KIT	
2	├─	⇨ U5MW0194	1	WATER PUMP	
3	└─ 3682A011		1	WATER PUMP JOINT	(A)
4	2314K164		2	SCREW	
5	2314H005		2	SCREW	
6	2314H012		5	SCREW	

Footnotes	
(A)	ALSO INCLUDED IN REPAIR KIT U7LW0172

LBHR2253

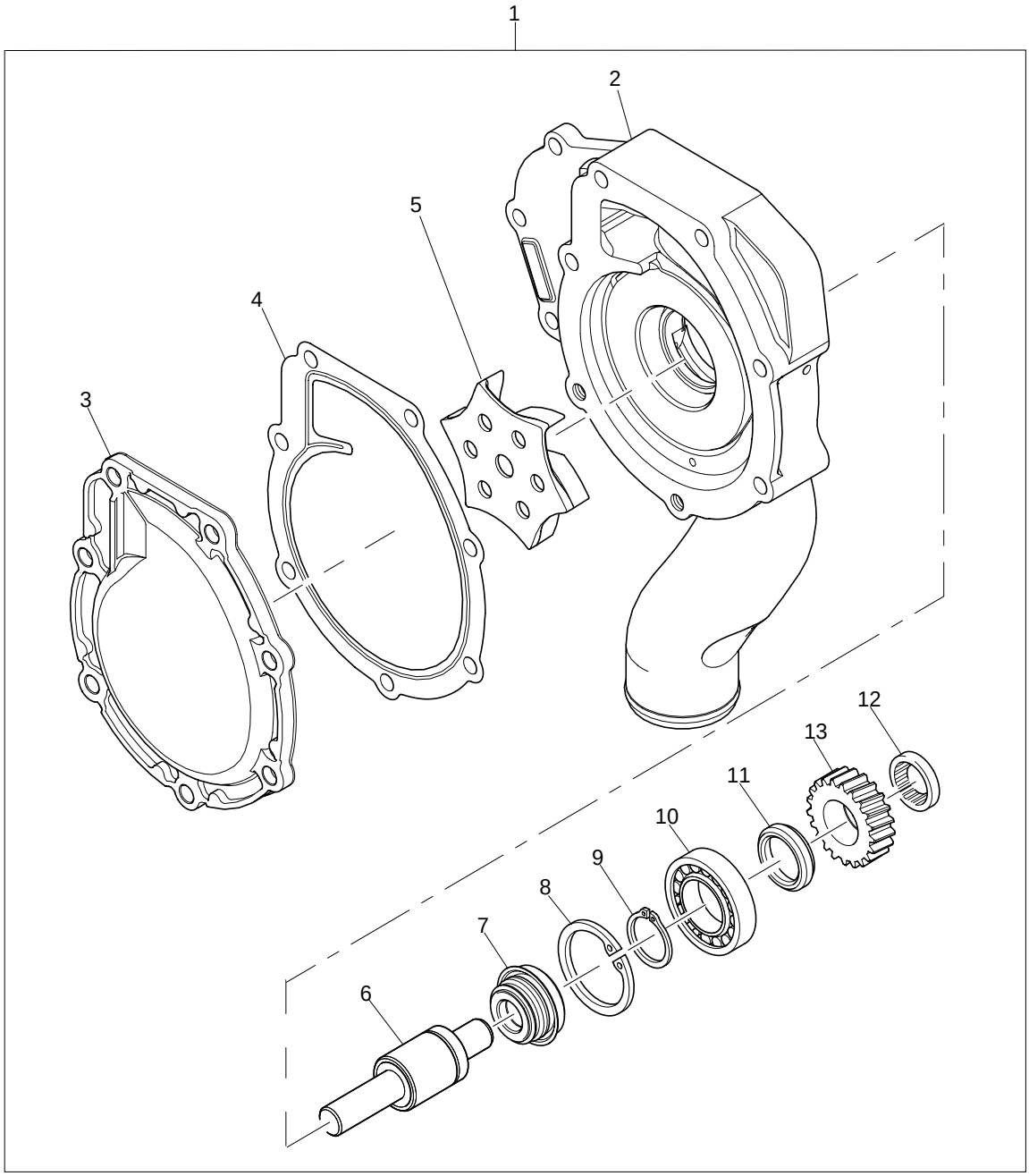

14

Repair Kit
Repair Jeu
Reparatursaetz
Repare Corredo
La Juego

Water Pump	Plate B
	LBHR2253

Item	Part No.	References	Qty.	Description	Notes
1			1	WATER PUMP	
2		U5MW0194	1	BODY	
3		U5MW0194	1	COVER	
4		U7LW0172	1	GASKET	
5		U7LW0172	1	IMPELLER	
6		U7LW0172	1	DRIVE SHAFT	
7		U7LW0172	1	SEAL	
8		U7LW0172	1	CIRCLIP	
9		U7LW0172	1	CIRCLIP	
10		U7LW0172	1	ROLLER BEARING	
11		U7LW0172	1	OIL SEAL	
12		U7LW0172	1	BEARING	
13	24880232		1	WATER PUMP GEAR	
14	U7LW0172		1	WATER PUMP REPAIR KIT	

LBHR2253

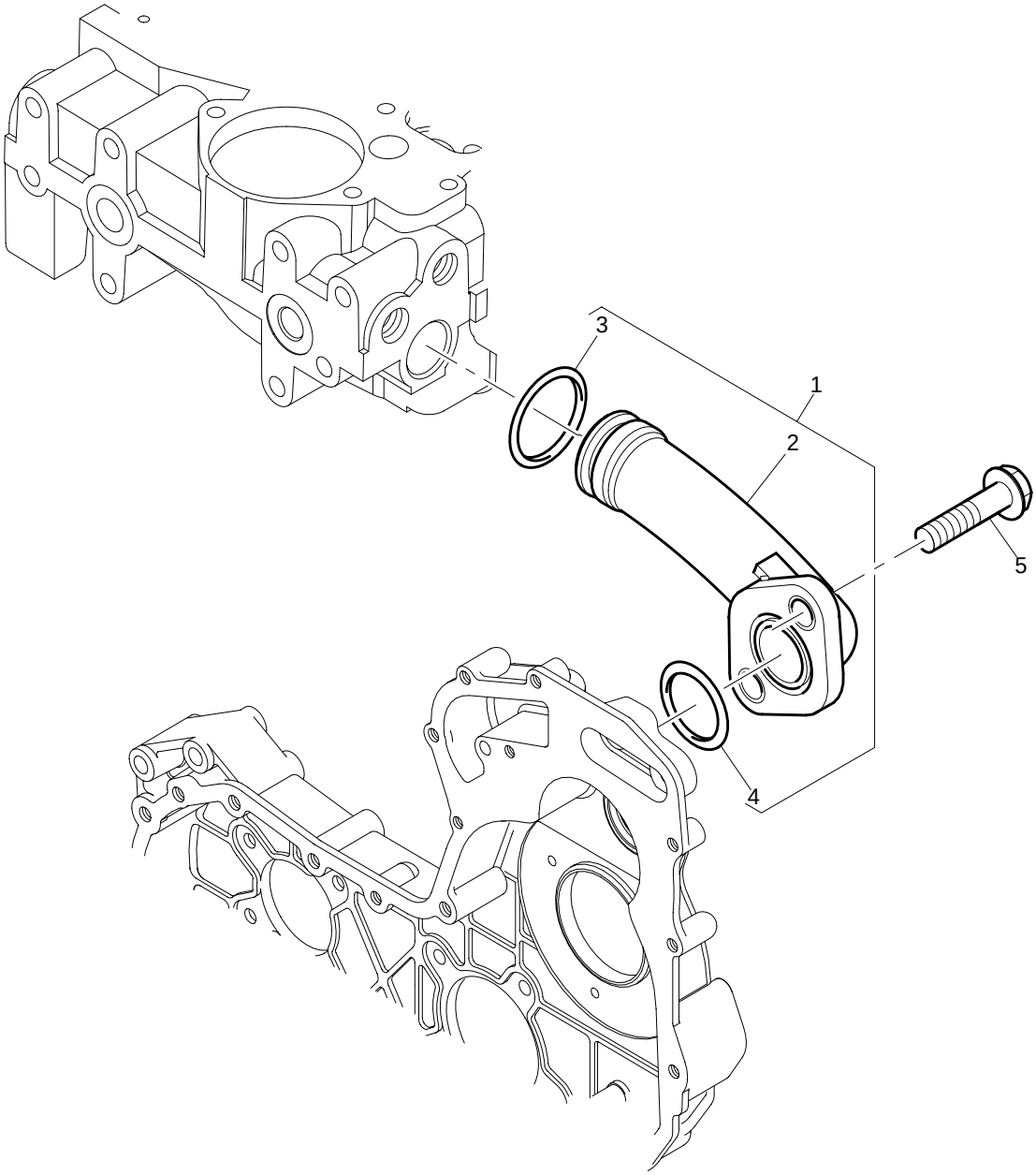

Pipes	Plate A
	LBHR2253

Item	Part No.	References	Qty.	Description	Notes
1	4133L048		1	CONNECTION	
2	├─	⇨ 4133L048	1	CONNECTION	
3	├─ 2418F002		1	O RING	
4	└─ 2418F001		1	O RING	
5	2314H003		2	SCREW	

Water Outlet Housing	Plate A
	LDHR0702

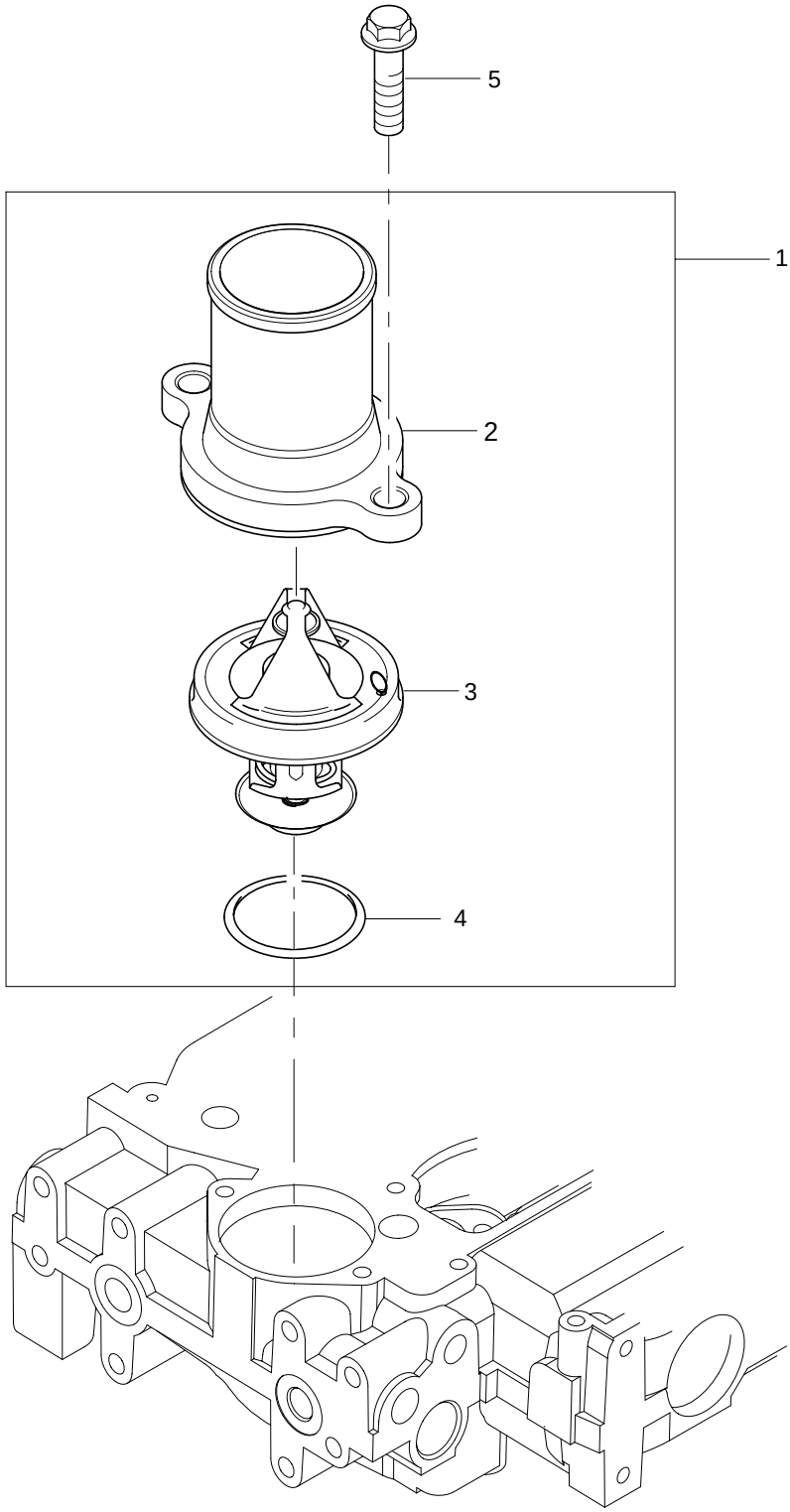

Water Outlet Housing	Plate A
	LDHR0702

Item	Part No.	References	Qty.	Description	Notes
1	4133L501		1	CONNECTION	
2	├─	⇨ 4133L501	1	CONNECTION	
3	├─ 2485C041		1	THERMOSTAT	
4	└─ 2415H008		1	O RING	
5	2314H004		2	SCREW	

Fan	Plate A
	MDHR1087

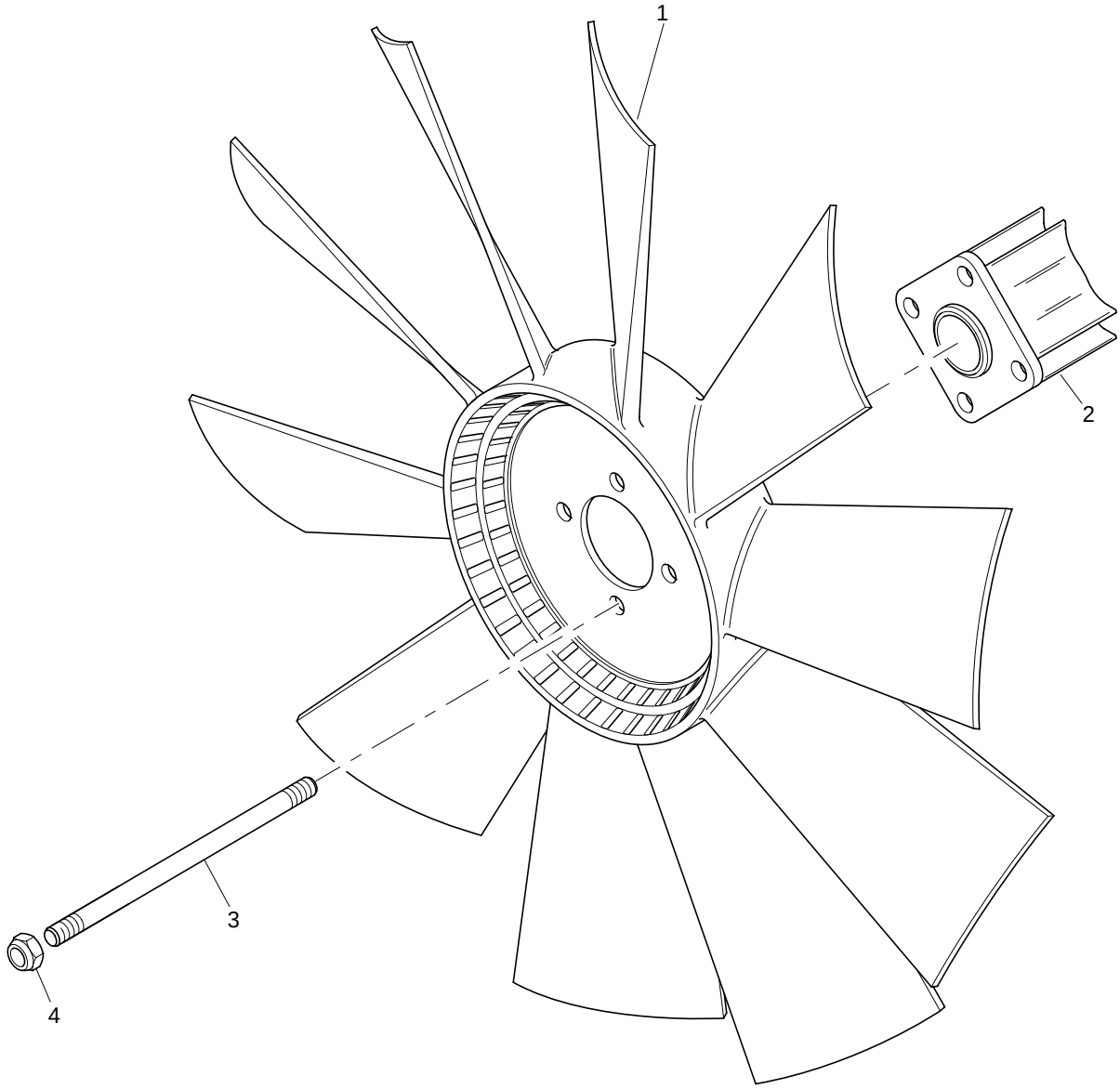

Fan	Plate A
	MDHR1087

Item	Part No.	References	Qty.	Description	Notes
1	2485C518		1	FAN	
2	3748W242		1	EXTENSION	
3	2313H236		4	STUD	
4	2318D208		4	NUT	

Alternator	Plate A
	NDHR2710

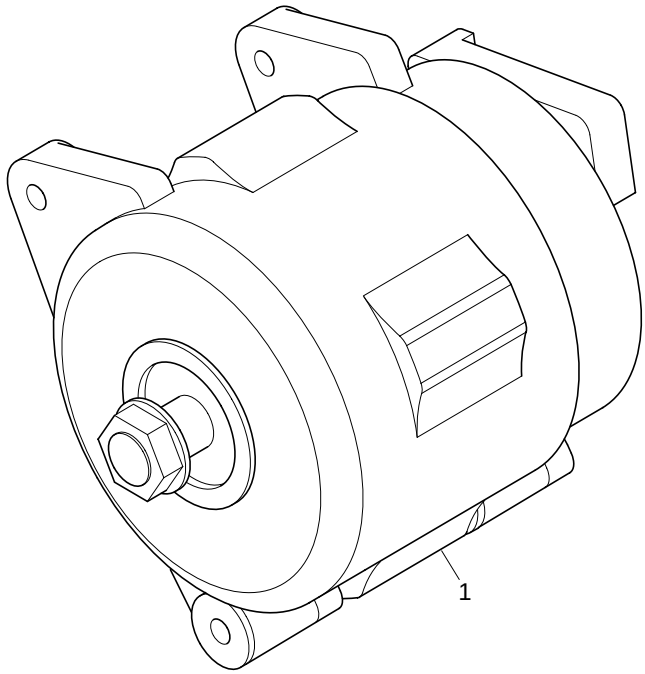

Alternator	Plate A
	NDHR2710

Item	Part No.	References	Qty.	Description	Notes
1	2871A301		1	ALTERNATOR	(A)

Footnotes	
(A)	BREAKDOWN HAS YET TO BE ADVISED

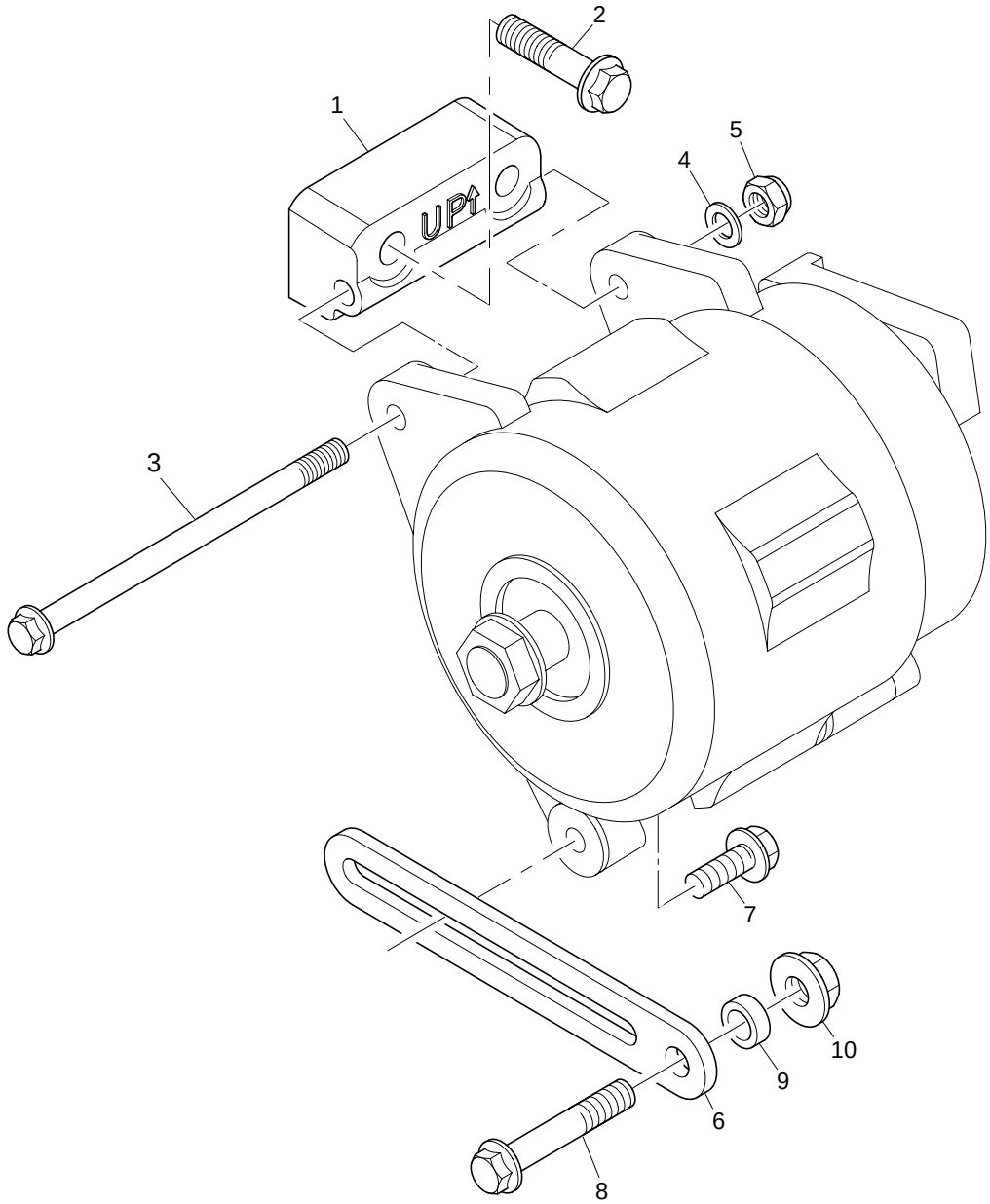
2
1
5
4
3
7
10
9
6
8

Alternator Bracket & Fixings	Plate A
	NDHR2710

Item	Part No.	References	Qty.	Description	Notes
1	3824A071		1	ALTERNATOR BRACKET	
2	2314J007		2	SCREW	
3	2314H052		1	SCREW	
4	2131A008		1	WASHER	
5	2318D208		1	NUT	
6	36155429		1	LEVER	
7	2314H103		1	SCREW	
8	2314J012		1	SCREW	
9	0920465		1	SPACER	
10	2318A604		1	NUT	

NDHR2710

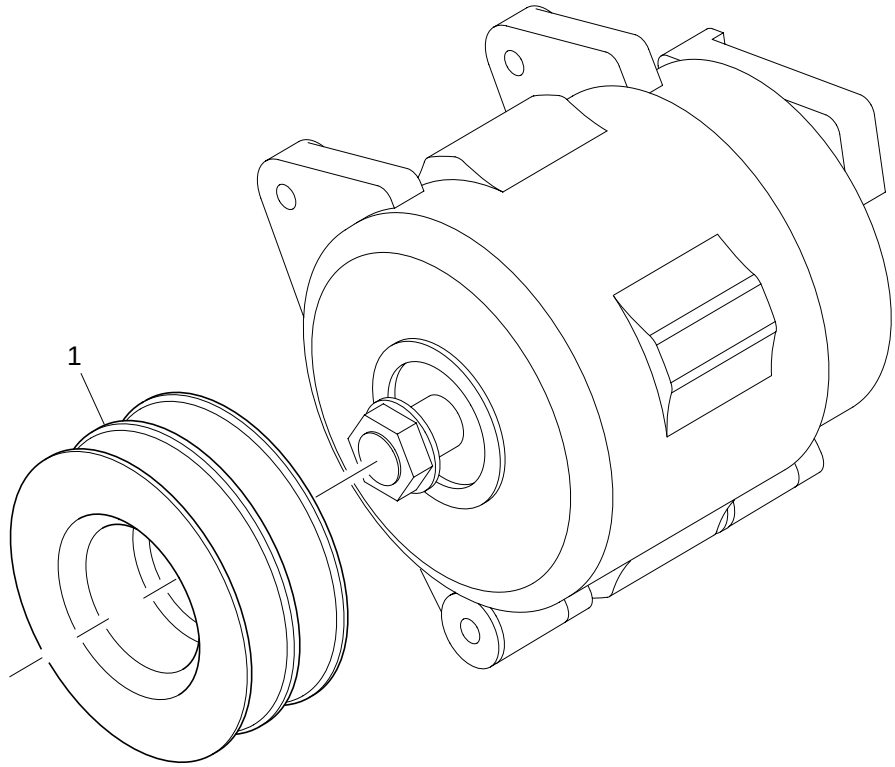

Pulleys	Plate A
	NDHR2710

Item	Part No.	References	Qty.	Description	Notes
1	3115A049		1	2 GROOVE ALTERNATOR PUL-	

Timing Case	Plate A
	QCHR0024

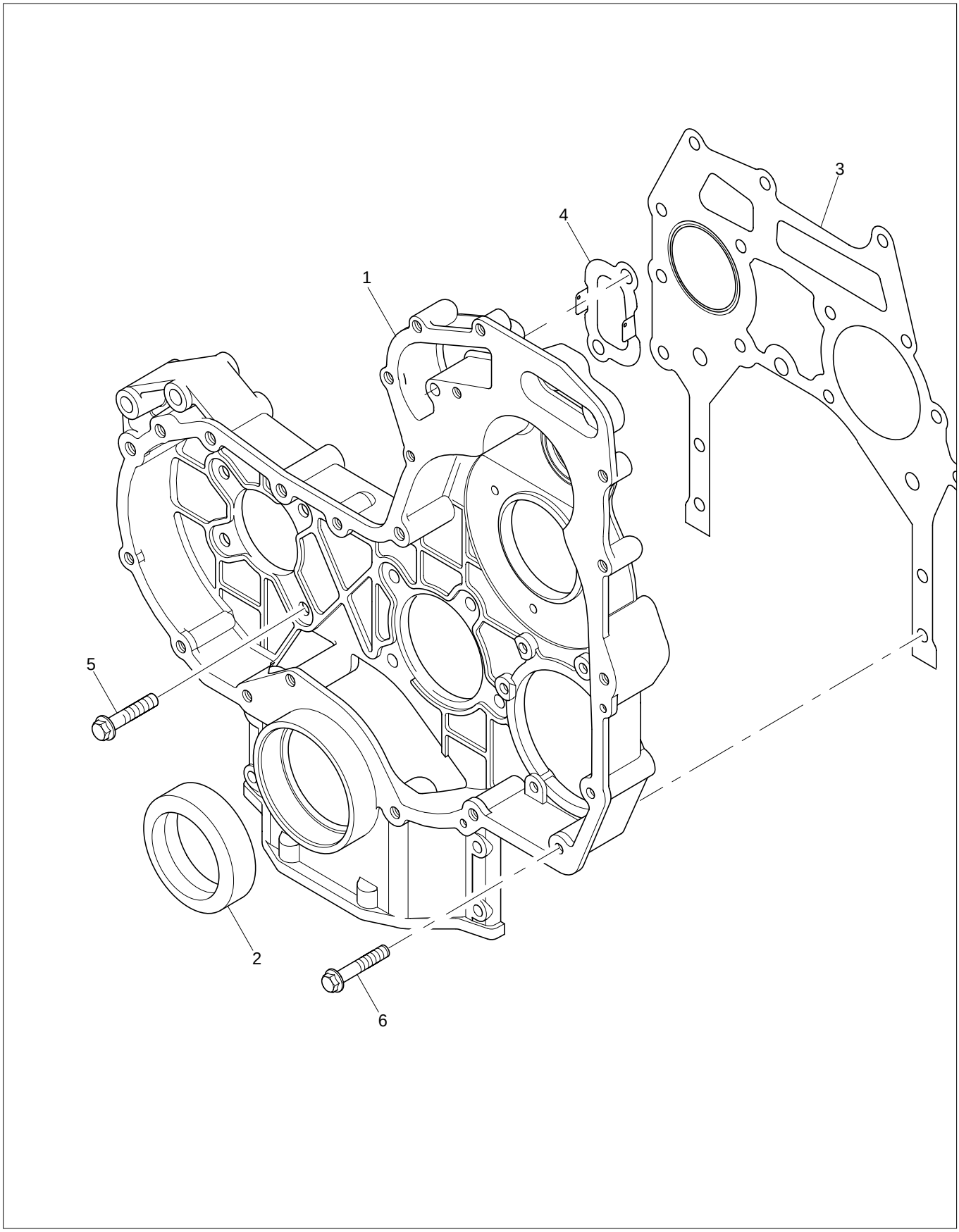

Timing Case	Plate A
	QCHR0024

Item	Part No.	References	Qty.	Description	Notes
1	3716C471		1	TIMING CASE	
2	2418F436		1	FRONT OIL SEAL	
3	3617V015		1	TIMING CASE JOINT	
4	3617V016		1	TIMING CASE JOINT	
5	2314H003		8	SCREW	
6	2314H034		4	SCREW	

Timing Case	Plate B
	QCHR0024

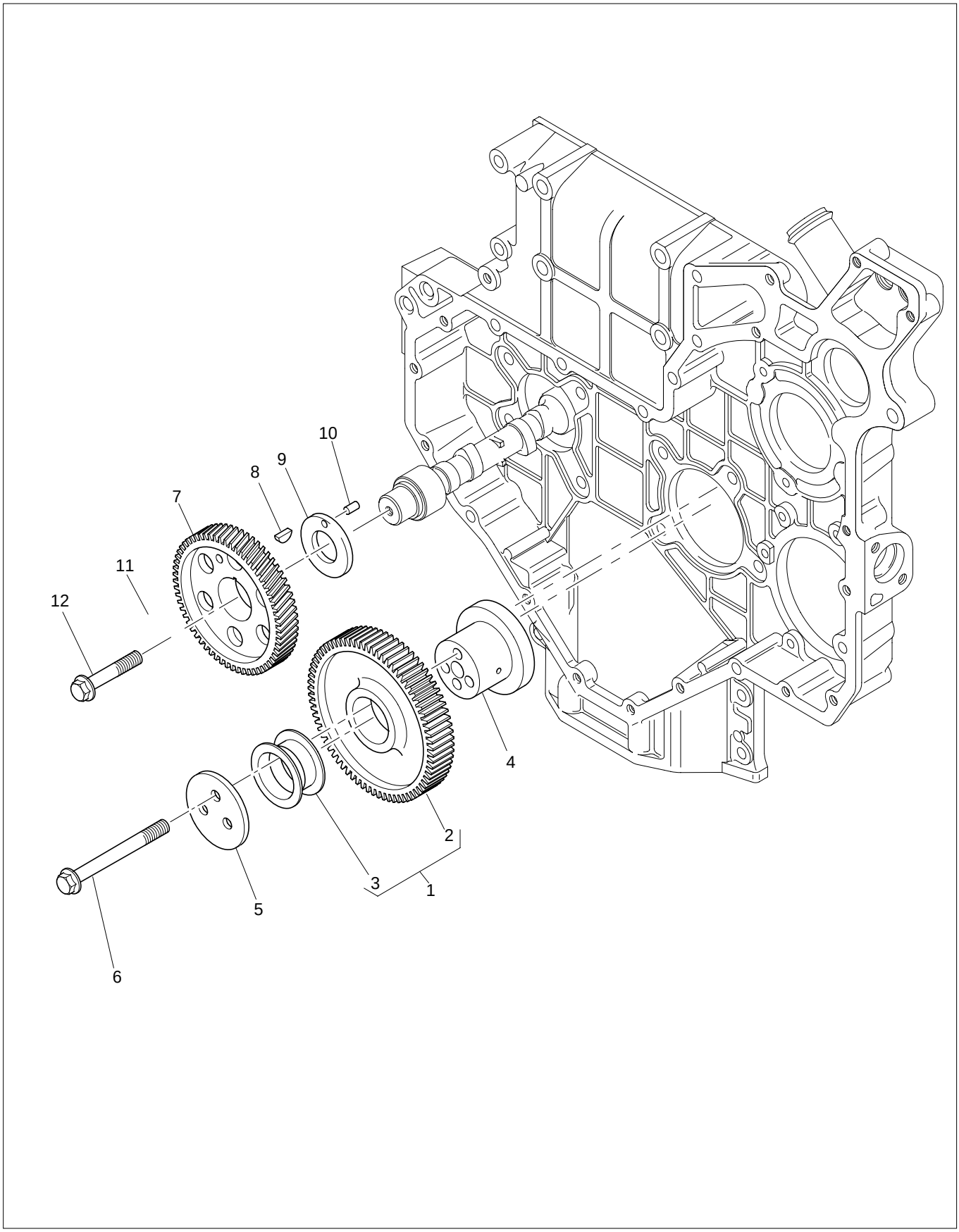

Timing Case	Plate B
	QCHR0024

Item	Part No.	References	Qty.	Description	Notes
1	3117N042		1	IDLER GEAR	
2	├─	⇨ 3117N042	1	IDLER GEAR	
3	└─ 0050345		2	BUSH	
4	33426161		1	HUB	
5	3241H009		1	PLATE	
6	2314J010		3	SCREW	
7	3117N001		1	CAMSHAFT GEAR	
8	0500012		1	WOODRUFF KEY	
9	3321A003		1	WASHER	
10	2116053		1	DOWEL	
11	3112X011		1	THRUST WASHER	
12	2314J606		1	SCREW	

QCHR0024

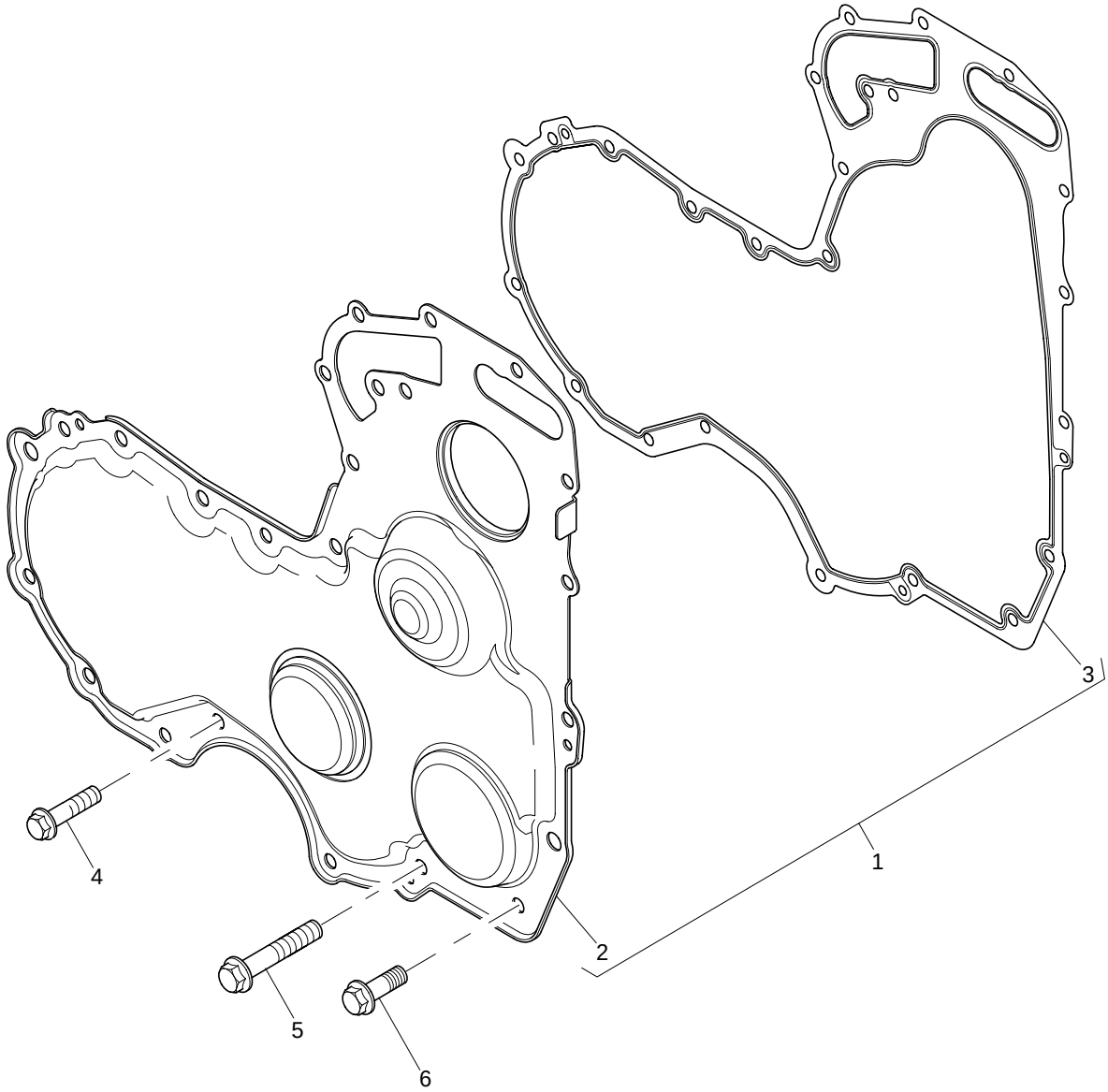

Timing Cover	Plate A
	QCHR0024

Item	Part No.	References	Qty.	Description	Notes
1	4142A502		1	TIMINGGEAR COVER	
2	├─		1	TIMING COVER	
3	└─ 3681P047		1	COVER JOINT	
4	2314H002		9	SCREW	
5	2314H012		5	SCREW	
6	2314J002		1	SCREW	

QDHR1380

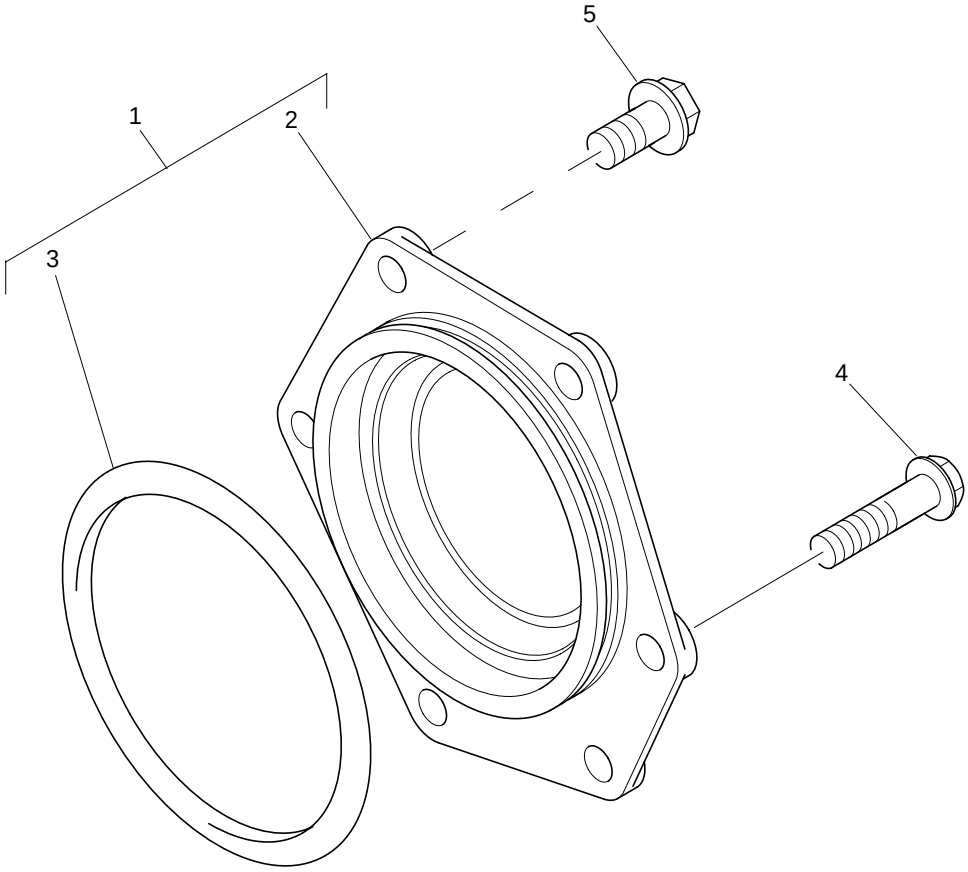

Blanking Plates	Plate A
	QDHR1380

Item	Part No.	References	Qty.	Description	Notes
1	4148K006		1	BLANKING PLATE	
2	├─	⇨ 4148K006	1	BLANKING PLATE	
3	└─ 2415H503		1	O RING	
4	2314H032		5	SCREW	
5	2314J002		1	SCREW	

Blanking Plugs	Plate A
	QDHR1380

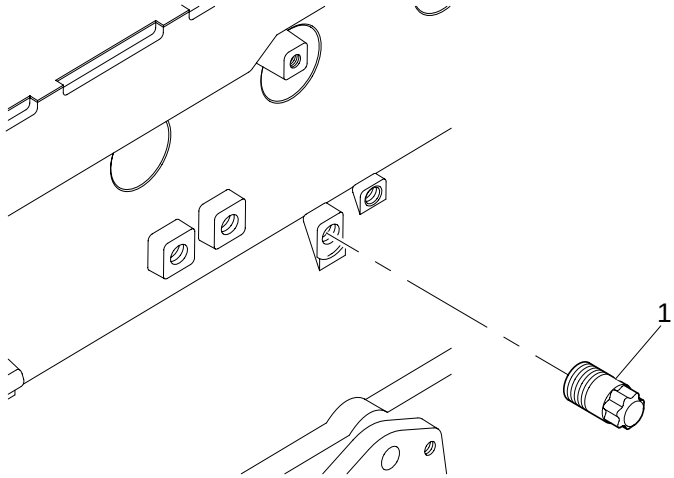

Blanking Plugs	Plate A
	QDHR1380

Item	Part No.	References	Qty.	Description	Notes
1	3212V005		1	PLUG	

Lubricating Oil Pump & Delivery Housing	Plate A
	RBHR0031

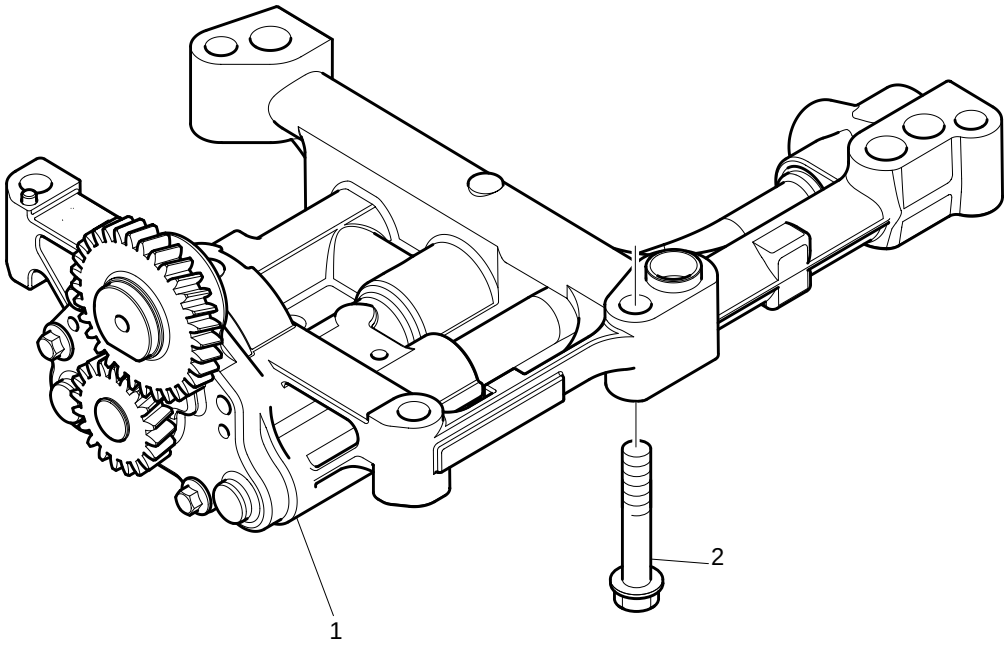

Lubricating Oil Pump & Delivery Housing	Plate A
	RBHR0031

Item	Part No.	References	Qty.	Description	Notes
1	4132F071		1	OIL PUMP	
2	2314J008		5	SCREW	

SBHR1510

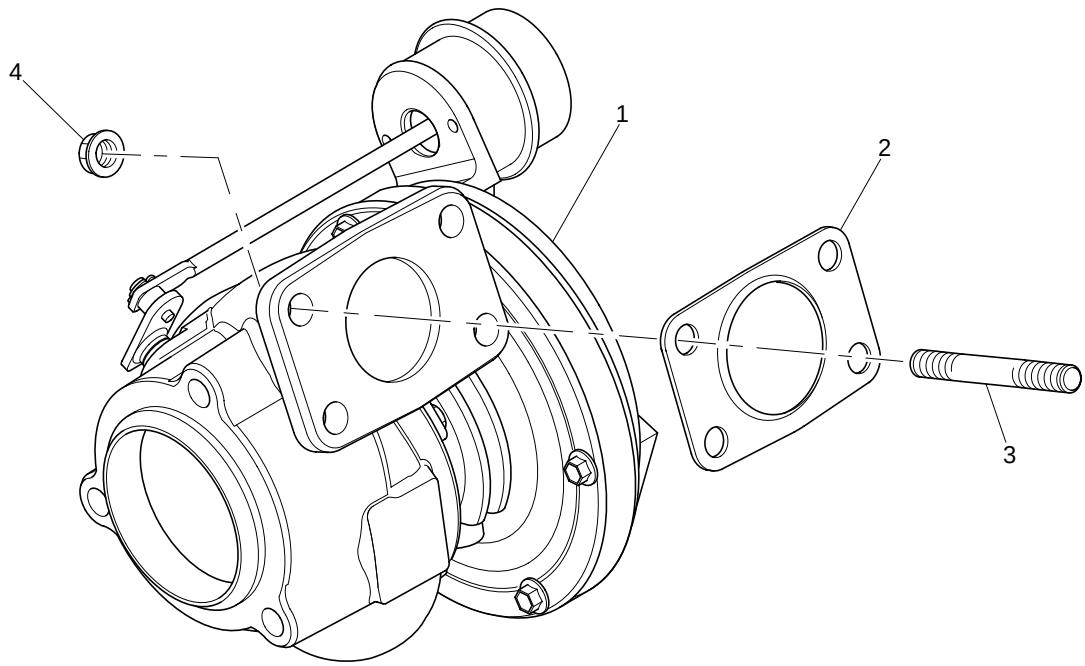

Turbocharger	Plate A
	SBHR1510

Item	Part No.	References	Qty.	Description	Notes
1	2674A403		1	TURBOCHARGER	
2	3688A029		1	JOINT	
3	2313M377		4	STUD	
4	2318A634		4	NUT	

SBHR1510

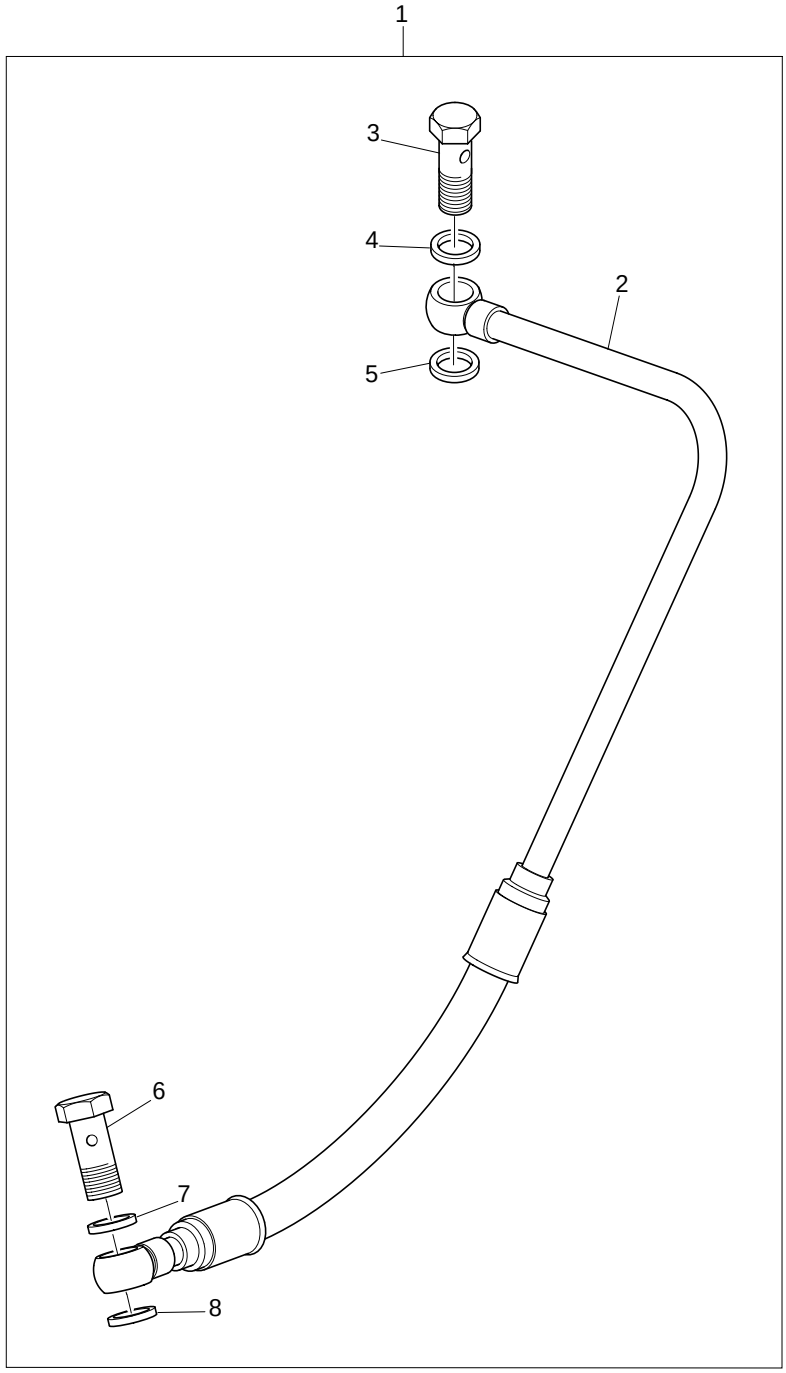

Feed Pipes	Plate A
	SBHR1510

Item	Part No.	References	Qty.	Description	Notes
1	4128A027		1	TURBO FEED PIPE	
2	├─	⇨ 4128A027	1	TURBO FEED PIPE	
3	├─ 3218R036		1	BANJO BOLT	
4	├─ 2131A506		1	WASHER	
5	├─ 2131A506		1	WASHER	
6	├─ 3218R036		1	BANJO BOLT	
7	├─ 2131A506		1	WASHER	
8	└─ 2131A506		1	WASHER	

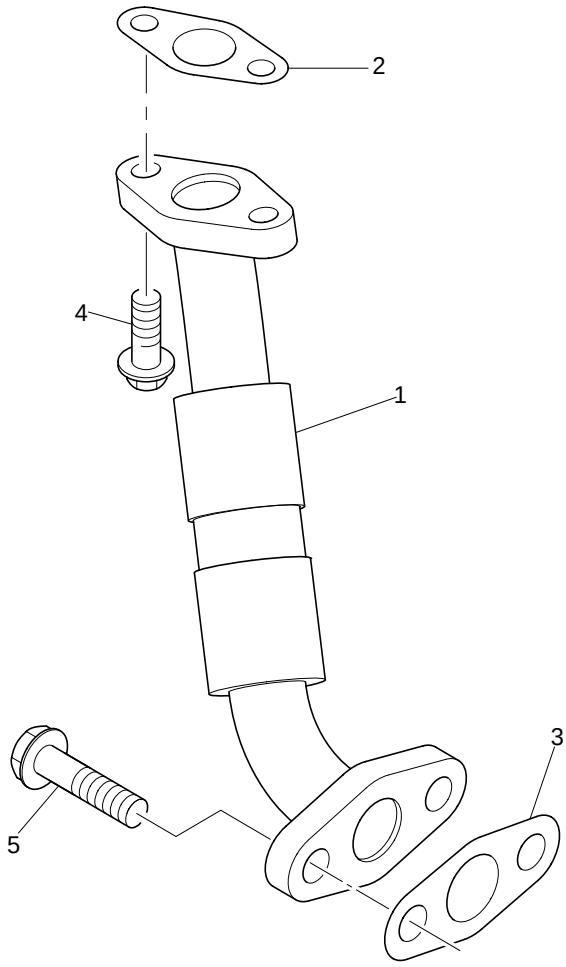
2
4
1
3
5

Leak-Off Pipes	Plate A
	SBHR1510

Item	Part No.	References	Qty.	Description	Notes
1	3584A001		1	TURBO DRAIN PIPE	
2	3688A035		1	JOINT	
3	3688A036		1	JOINT	
4	2314F004	a.	2	SCREW	
5	2314H003		2	SCREW	

History

a.

4	2316T130		1	SCREW	

SBHR1510

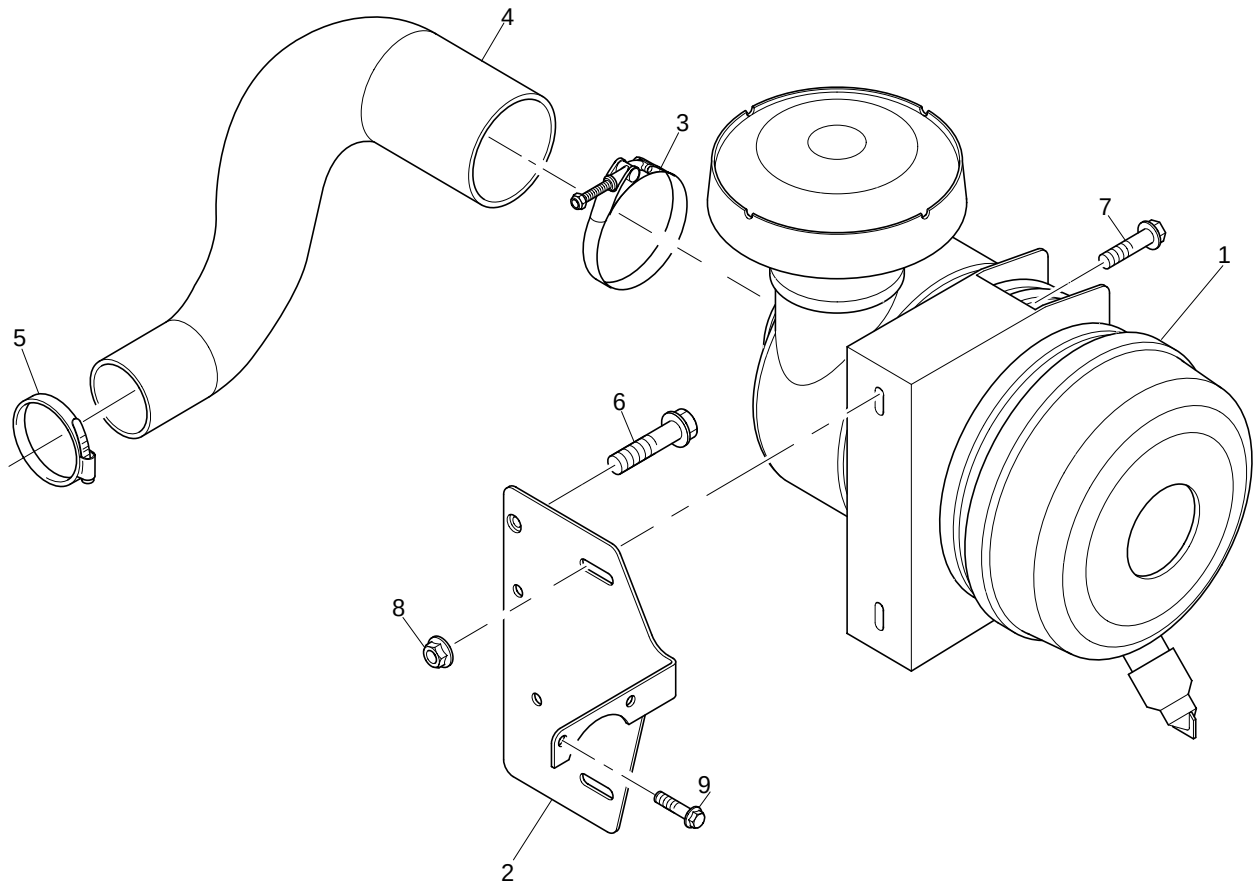

Air Filters	Plate A
	SBHR1510

Item	Part No.	References	Qty.	Description	Notes
1	2652C201		1	AIR FILTER	
2	3644A019		1	BRACKET	
3	2481D077		1	HOSE CLIP	
4	3783R007		1	HOSE	
5	2481D075		1	HOSE CLIP	
6	2314J007		2	SCREW	
7	2314H005		2	SCREW	
8	2318A603		2	NUT	
9	2314H033		2	SCREW	

SBHR1510

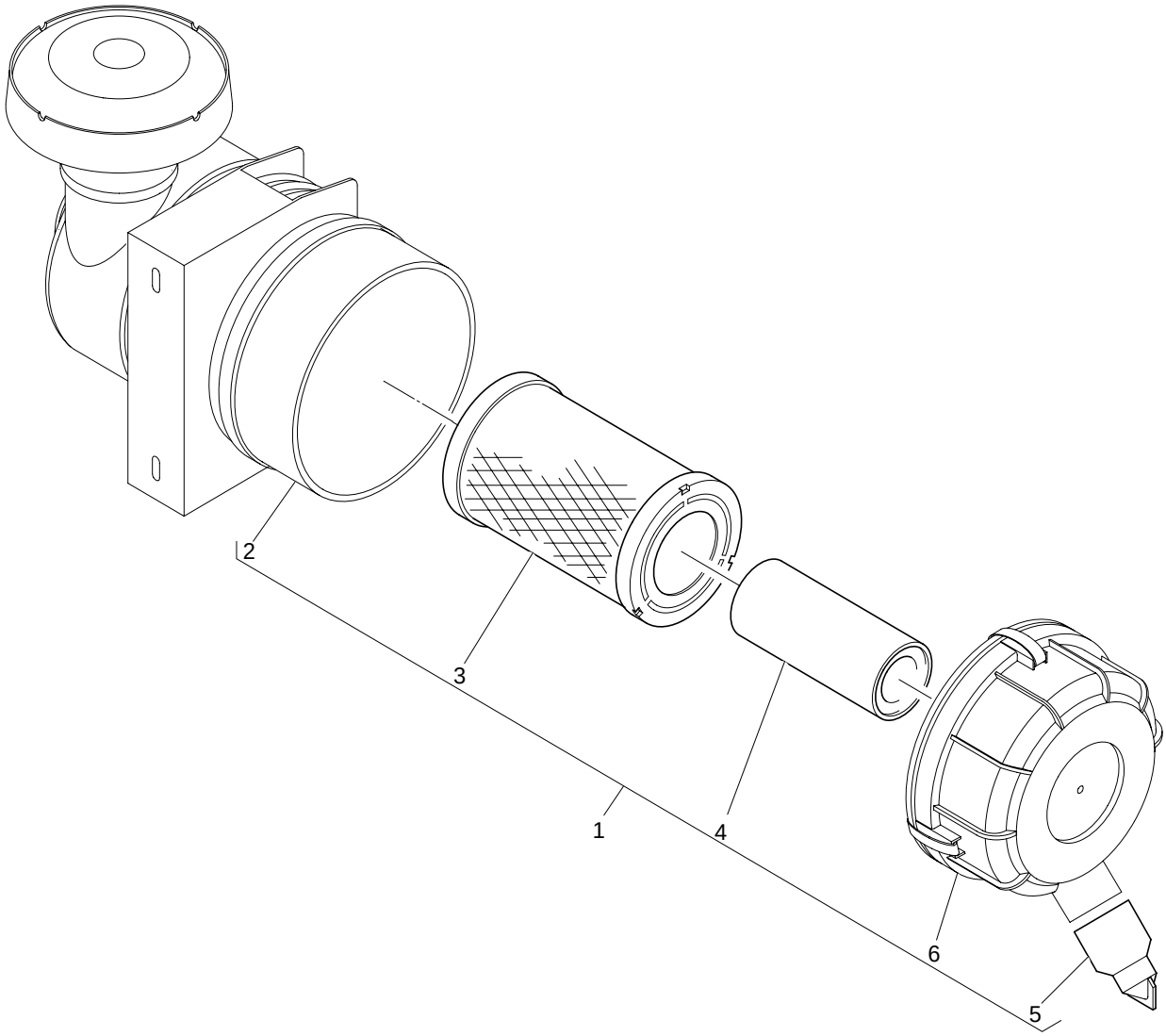

SBHR1510

Item	Part No.	References	Qty.	Description	Notes
1	2652C201		1	AIR FILTER	
2	├─	⇨ 2652C201	1	AIR FILTER BODY	
3	├─ 26510394		1	AIR FILTER ELEMENT	
4	├─ 26510393		1	AIR FILTER ELEMENT	
5	├─ 26510386		1	VALVE	
6	└─	⇨ 2652C201	1	CAP	

SBHR1510

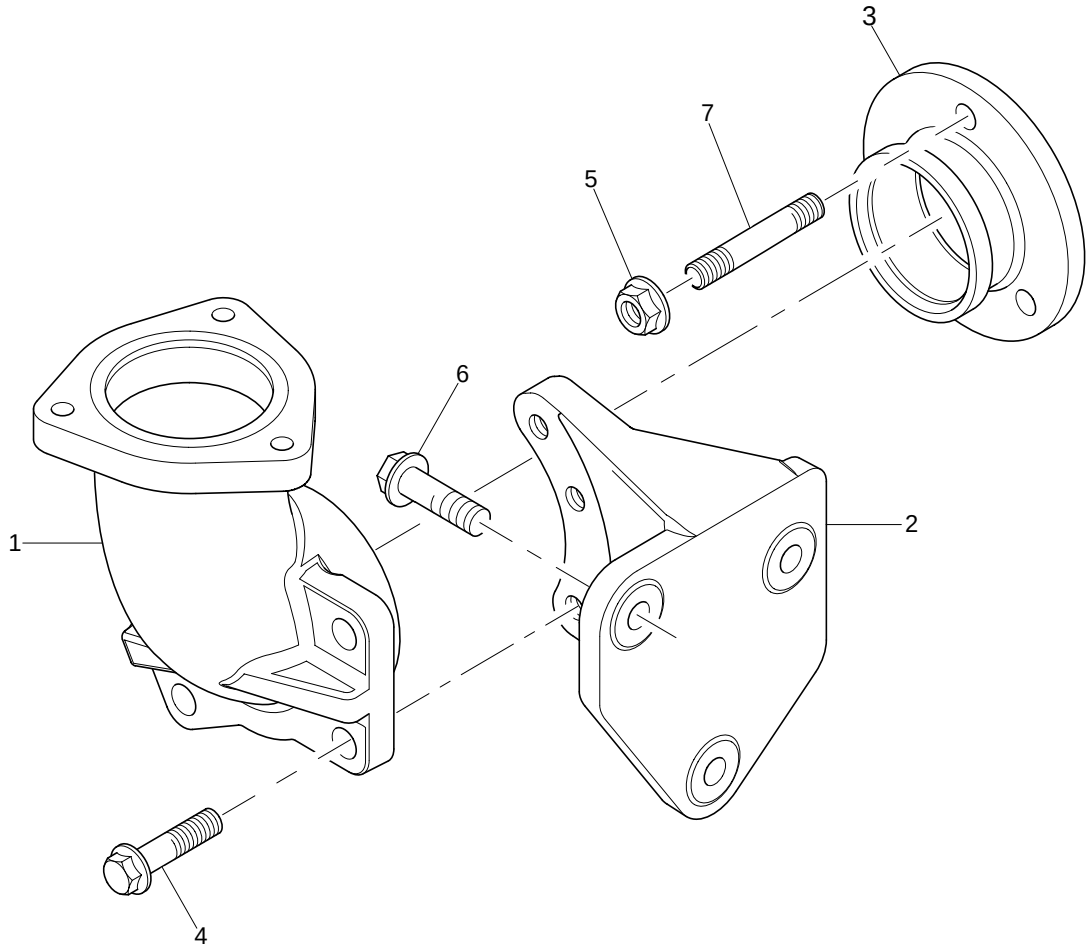

Pipework & Connections	Plate A
	SBHR1510

Item	Part No.	References	Qty.	Description	Notes
1	3766A131		1	EXHAUST ELBOW	
2	3823A051		1	BRACKET	
3	3347A041		1	ADAPTOR	
4	2314J003		3	SCREW	
5	2318A634		3	NUT	
6	2314J004		1	SCREW	
7	2313M377		1	STUD	

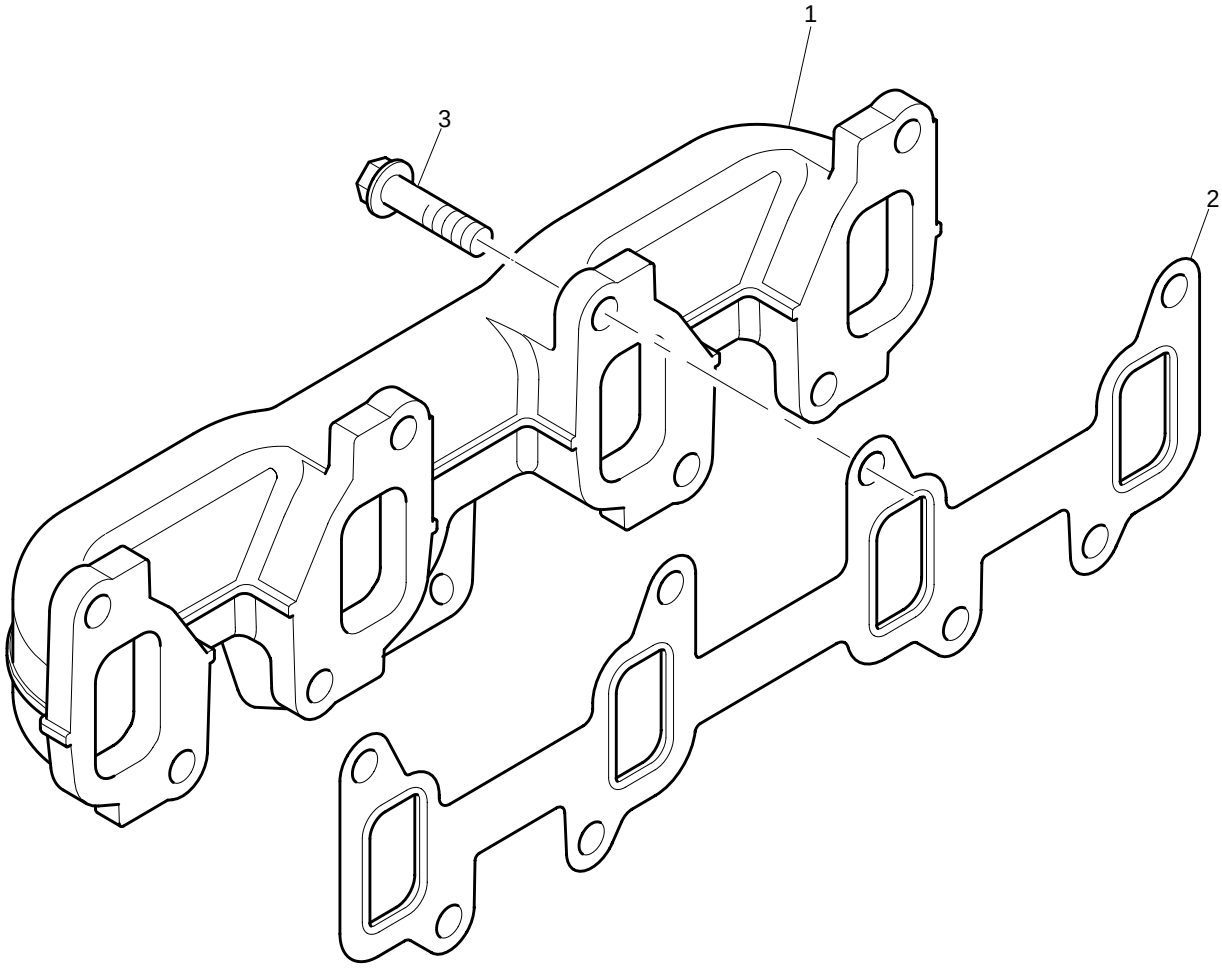
1
2
3

Exhaust Manifold	Plate A
	SBHR1510

Item	Part No.	References	Qty.	Description	Notes
1	3778E201		1	EXHAUST MANIFOLD	
2	3681V512		1	EXHAUST MANIFOLD JOINT	
3	3218J013		8	SCREW	

TBHR0855

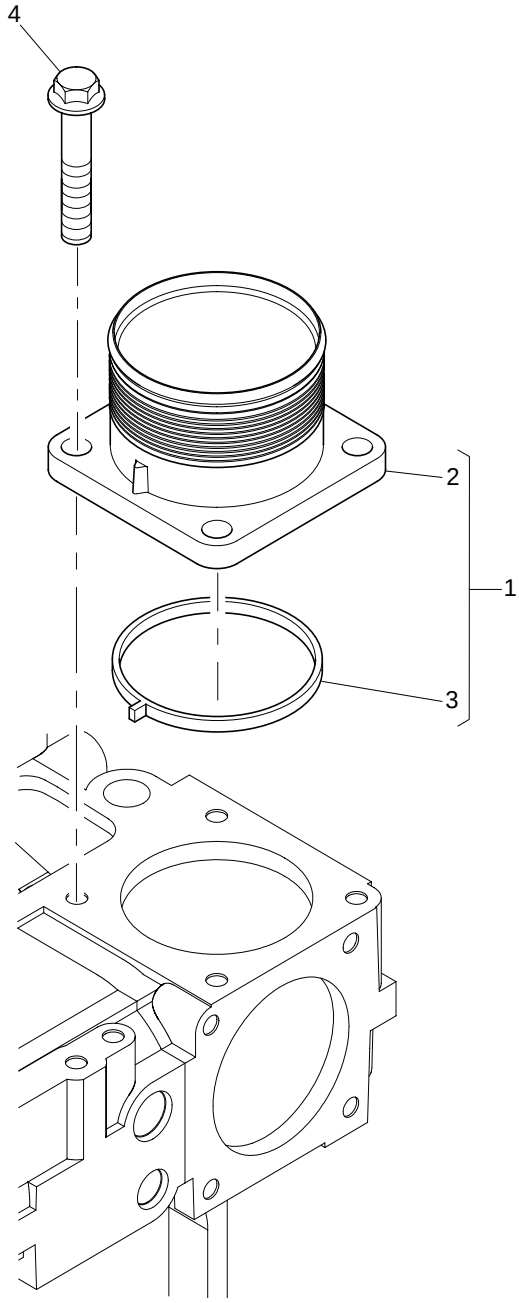

Induction Manifold	Plate A
	TBHR0855

Item	Part No.	References	Qty.	Description	Notes
1	4148K007		1	CONNECTION	
2	├─	⇨ 4148K007	1	CONNECTION	
3	└─ 3682A013		1	INLET MANIFOLD JOINT	
4	2314H034		1	SCREW	

TBHR0855

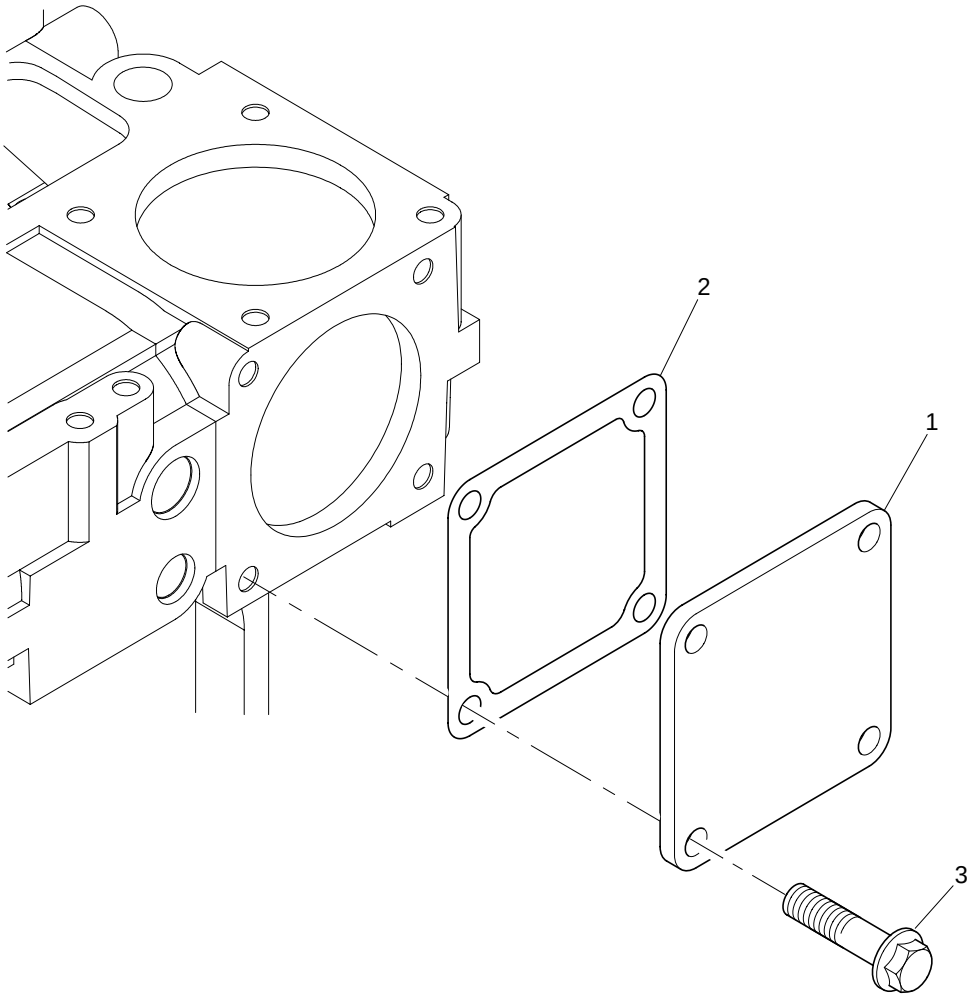

Pipework & Connections	Plate A
	TBHR0855

Item	Part No.	References	Qty.	Description	Notes
1	3611M006		3	PLATE	
2	3684N503		3	JOINT	
3	2314H033		12	SCREW	

VBHR2238

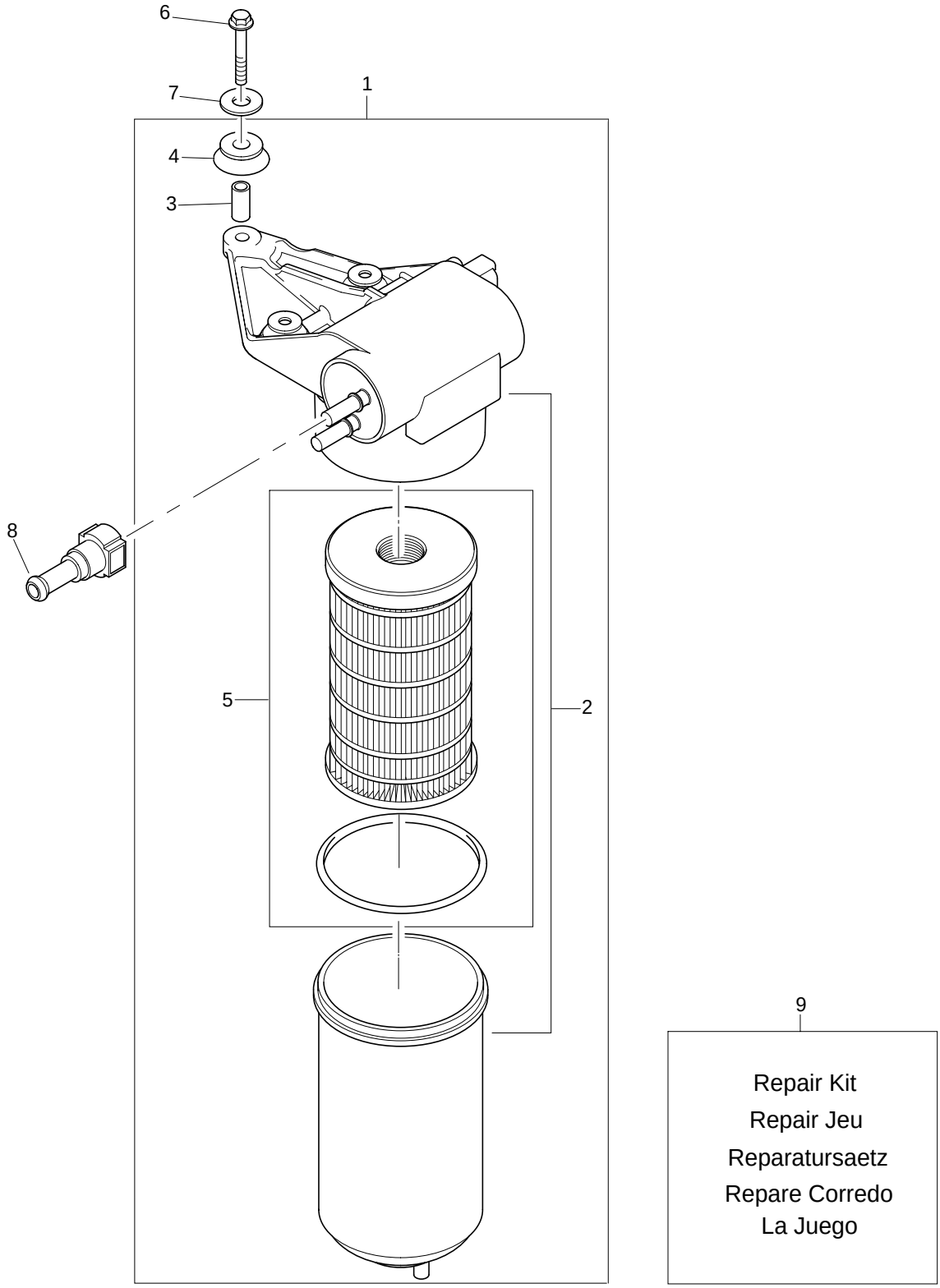
6
7
1
4
3
8
5
2
9
Repair Kit
Repair Jeu
Reparatursaetz
Repare Corredo
La Juego

Lift Pump	Plate A
	VBHR2238

Item	Part No.	References	Qty.	Description	Notes
1	4134M004		1	LIFT PUMP	
2	├─	⇨ 4134M004	1	LIFT PUMP	
3	├─	⇨ U5MK0696	3	SPACER	
4	├─	⇨ U5MK0696	6	MOUNTING	
5	└─ 26560201		1	FUEL FILTER ELEMENT KIT	
6	2314F909		3	SCREW	(A)
7	2131A507		3	WASHER	(A)
8	3763A046		1	CONNECTION	
9	U5MK0696		1	MOUNTING KIT	

Footnotes	
(A)	ALSO INCLUDED IN REPAIR KIT U5MK0696

Filter to Injection Pump Pipe	Plate A
	VBHR2238

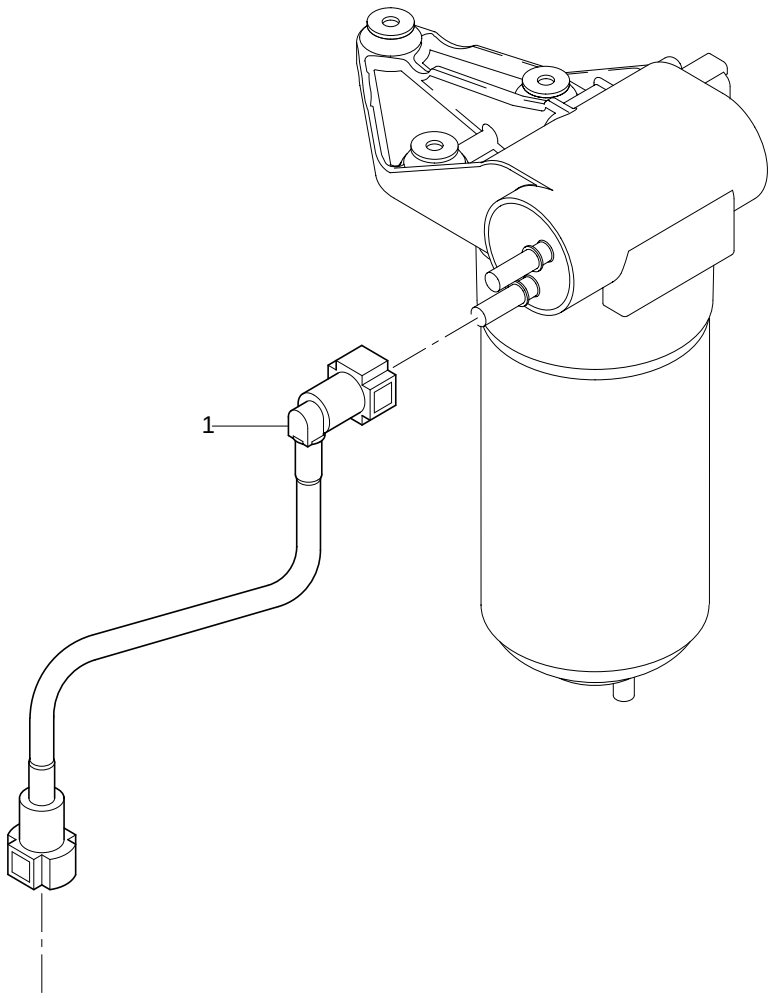

Filter to Injection Pump Pipe	Plate A
	VBHR2238

Item	Part No.	References	Qty.	Description	Notes
1	2646F001		1	FUEL FEED PIPE	

Injection Pump to Filter Pipe	Plate A
	VBHR2238

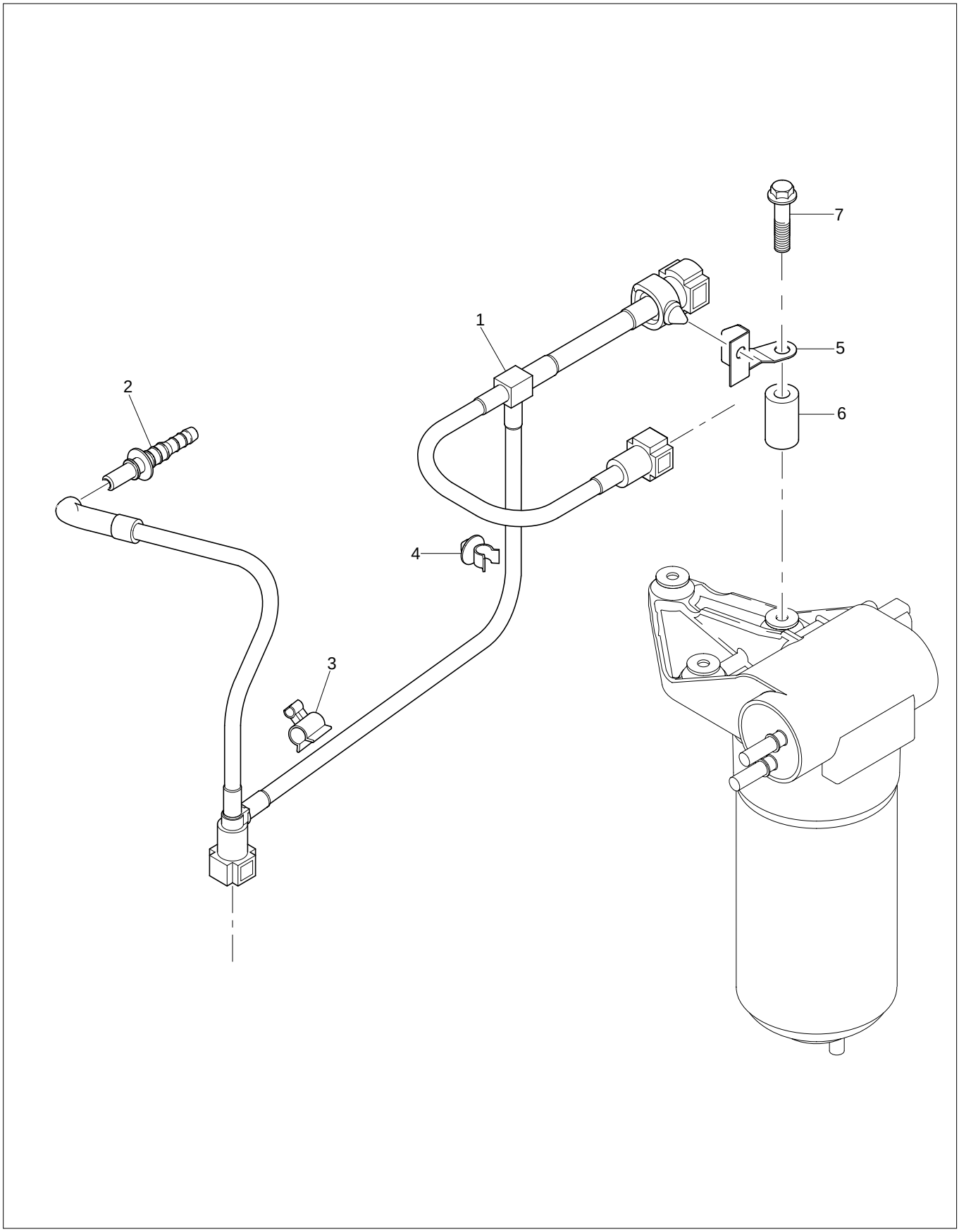

Injection Pump to Filter Pipe	Plate A
	VBHR2238

Item	Part No.	References	Qty.	Description	Notes
1	2646F002		1	FUEL FEED PIPE	
2	3763A045		1	CONNECTION	
3	K138AF02		1	CLIP	
4	2481D456		1	CLIP	
5	3733A008		1	BRACKET	
6	3313A006		1	SPACER	
7	2314H008		1	SCREW	

WDHR0345

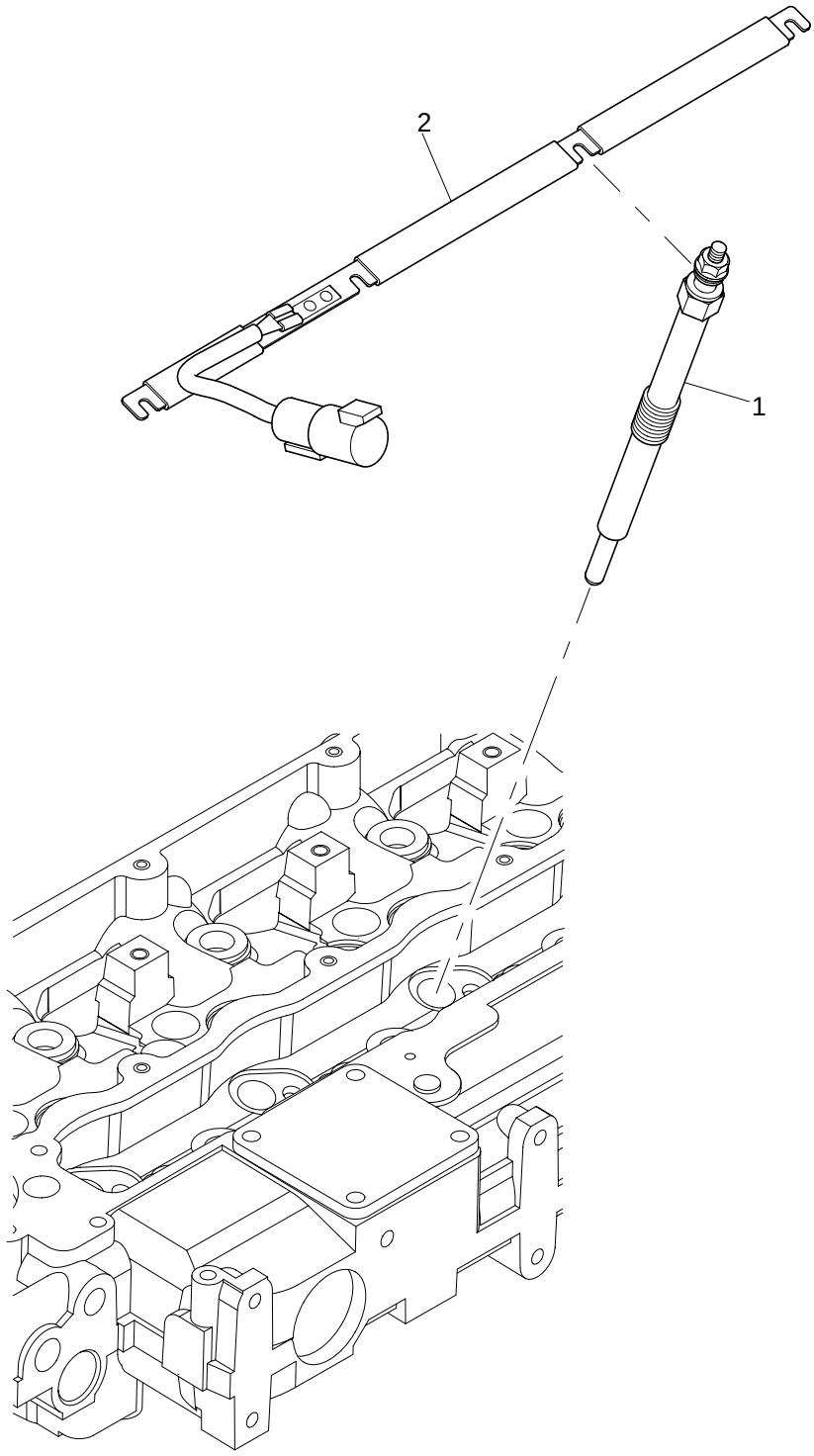

Heater Plugs	Plate A
	WDHR0345

Item	Part No.	References	Qty.	Description	Notes
1	2666A016		4	GLOW PLUG	
2	3161C015		1	BAR	

Engine Lifting Eyes	Plate A
	XBHR0458

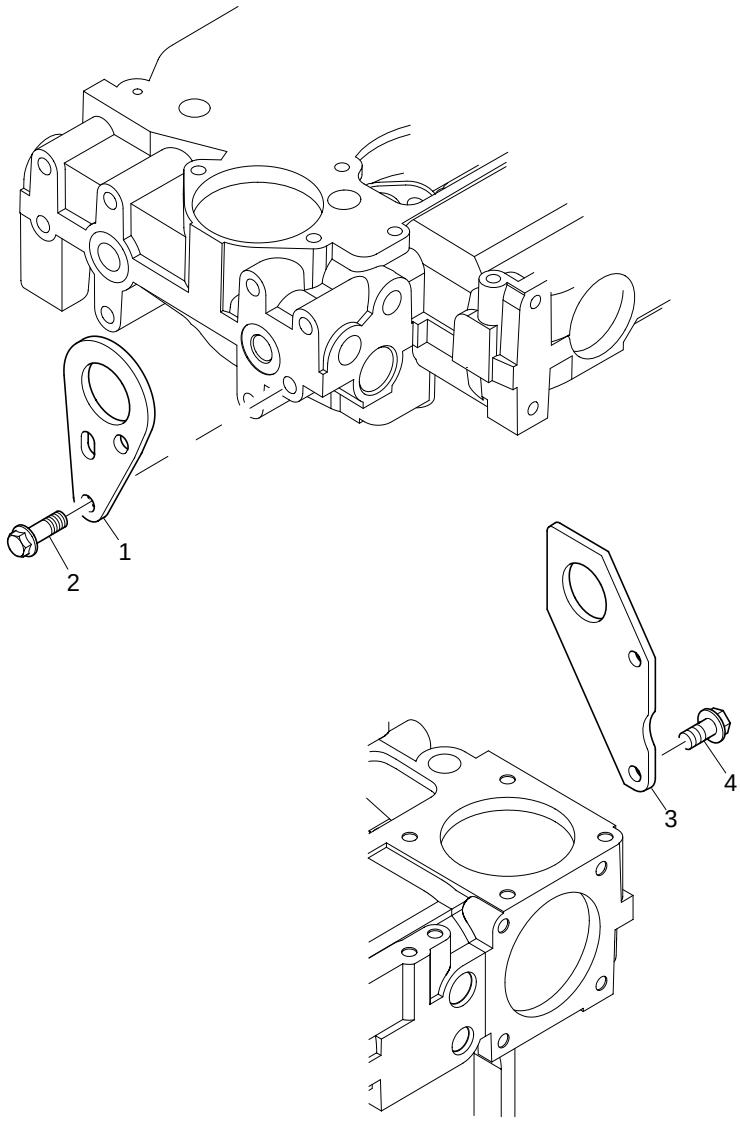

Engine Lifting Eyes	Plate A
	XBHR0458

Item	Part No.	References	Qty.	Description	Notes
1	3617A015		1	LIFTING BRACKET	
2	2314J002		2	SCREW	
3	3624A016	a.	1	LIFTING BRACKET	
4	2314J002		2	SCREW	

History

a.

3	3615A008		1	LIFTING BRACKET	

ZCHR0945

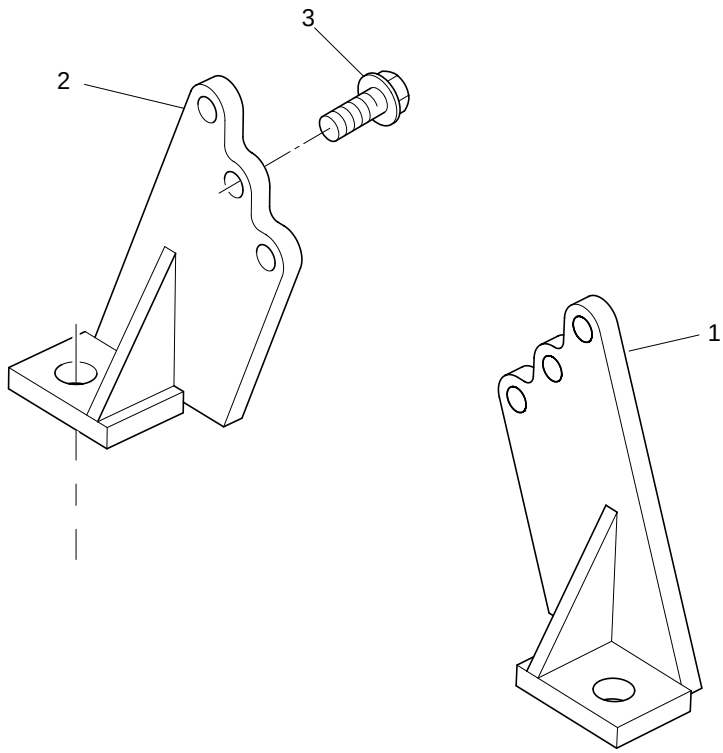

Engine Mounts	Plate A
	ZCHR0945

Item	Part No.	References	Qty.	Description	Notes
1	3821M003		1	BRACKET	
2	3821M004		1	BRACKET	
3	2314J603		6	SCREW	

ZCHR0945

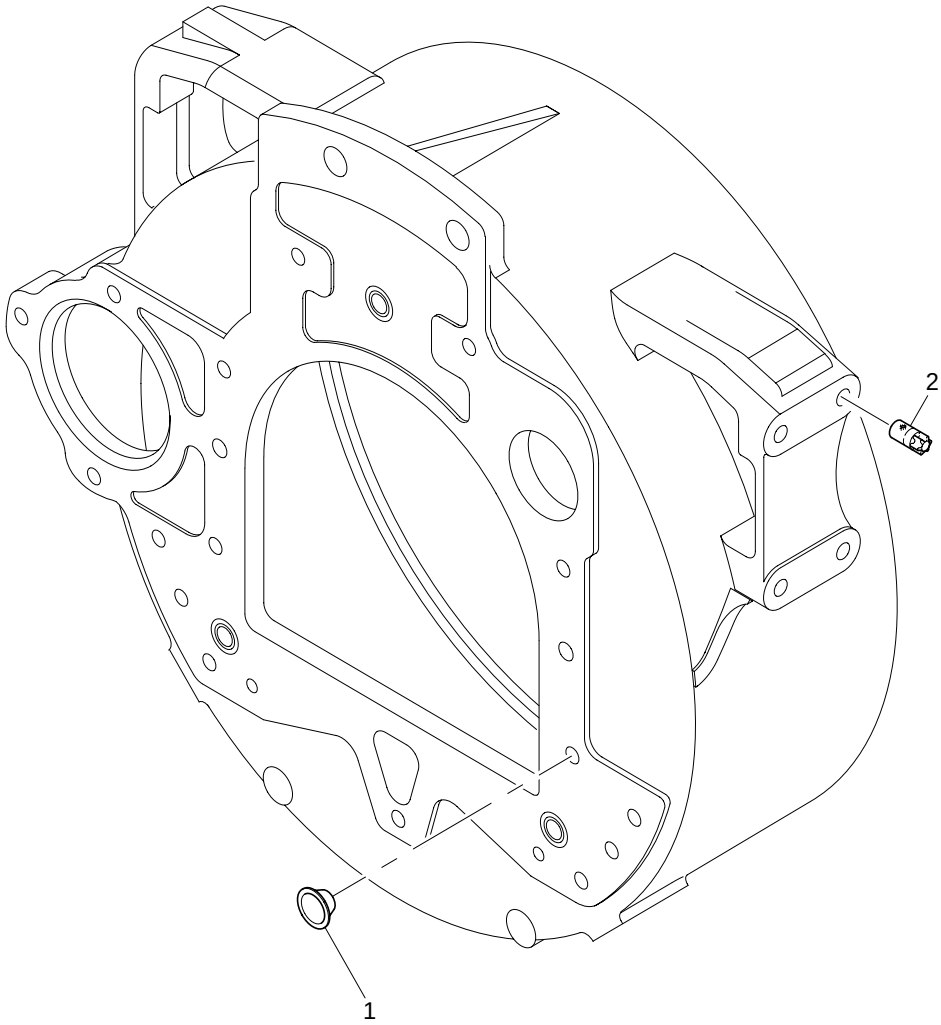

Engine Mounts	Plate B
	ZCHR0945

Item	Part No.	References	Qty.	Description	Notes
1	2487207		3	PLUG	
2	3212V004		4	PLUG	

Heater Switch	Plate A
	ZEHR0722

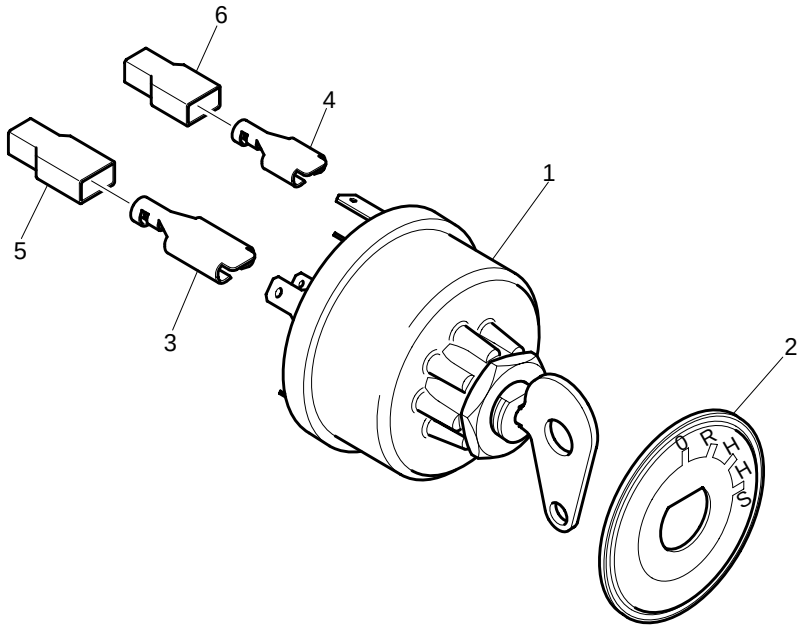

Heater Switch	Plate A
	ZEHR0722

Item	Part No.	References	Qty.	Description	Notes
1	2846131		1	SWITCH	
2	31812157		1	PLATE	
3	2815651		1	CONNECTOR	
4	2815512		6	CONNECTOR	
5	35684		1	SLEEVE	
6	35683		6	SLEEVE	

Lubricating Oil Pressure Switch/Gauge	Plate A
	ZJHR0533

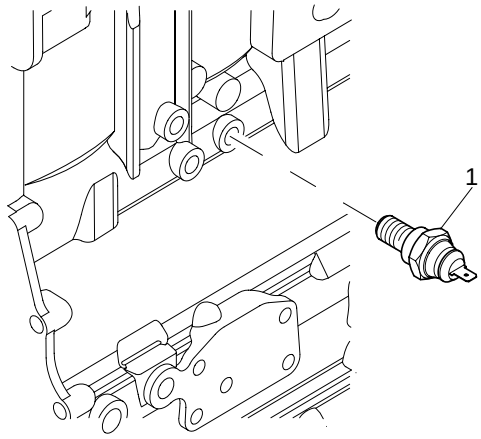

Lubricating Oil Pressure Switch/Gauge	Plate A
	ZJHR0533

Item	Part No.	References	Qty.	Description	Notes
1	2848062		1	OIL PRESSURE SWITCH	(A)

Footnotes	
(A)	OIL PRESSURE SWITCH

ZLHR0361

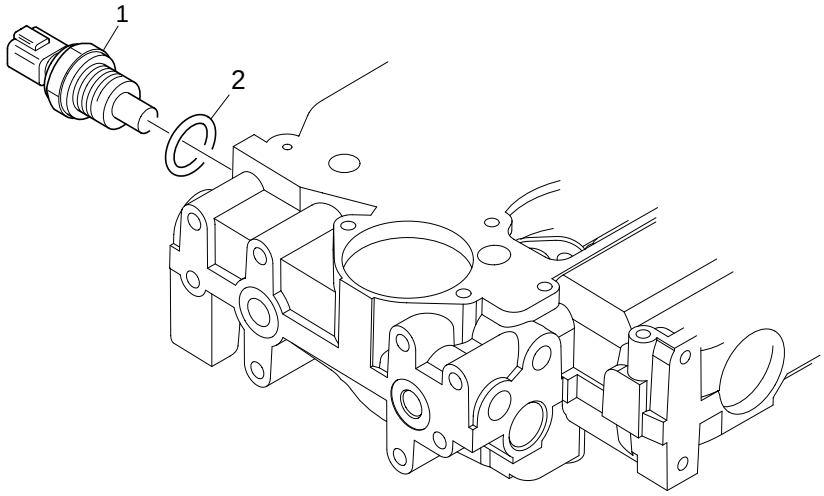

Temperature Gauge & Sender	Plate A
	ZLHR0361

Item	Part No.	References	Qty.	Description	Notes
1	2846A101		1	SENDER	
2	2415H003		1	O RING	

ZLHR0361

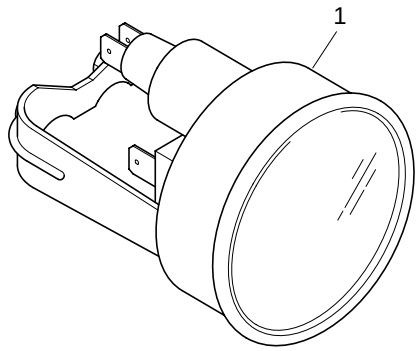

Temperature Gauge & Sender	Plate B
	ZLHR0361

Item	Part No.	References	Qty.	Description	Notes
1	2755A106		1	TEMPERATURE GAUGE	

ZMHR0549

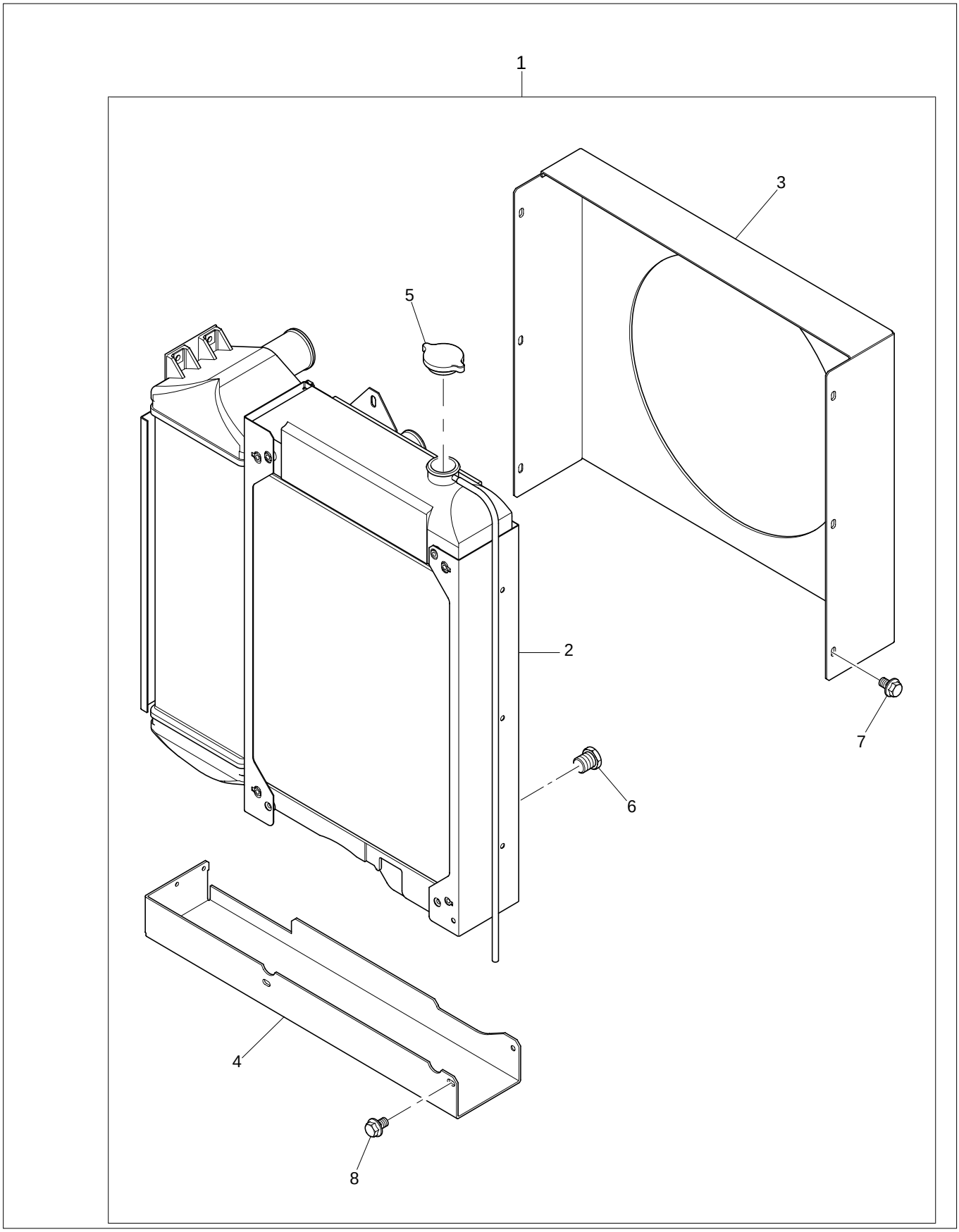

Radiator & Cowling	Plate A
	ZMHR0549

Item	Part No.	References	Qty.	Description	Notes
1	2486F102		1	RADIATOR	
2	├─	⇨ 2486F102	1	RADIATOR	
3	├─ 24850074		1	COWL	
4	├─ 24850076		1	MOUNTING BRACKET	
5	├─ 24850073		1	RADIATOR CAP	
6	├─ 24850077		1	DRAIN PLUG	
7	├─ 2314H102		6	SCREW	
8	└─ 2314H102		6	SCREW	

ZMHR0549

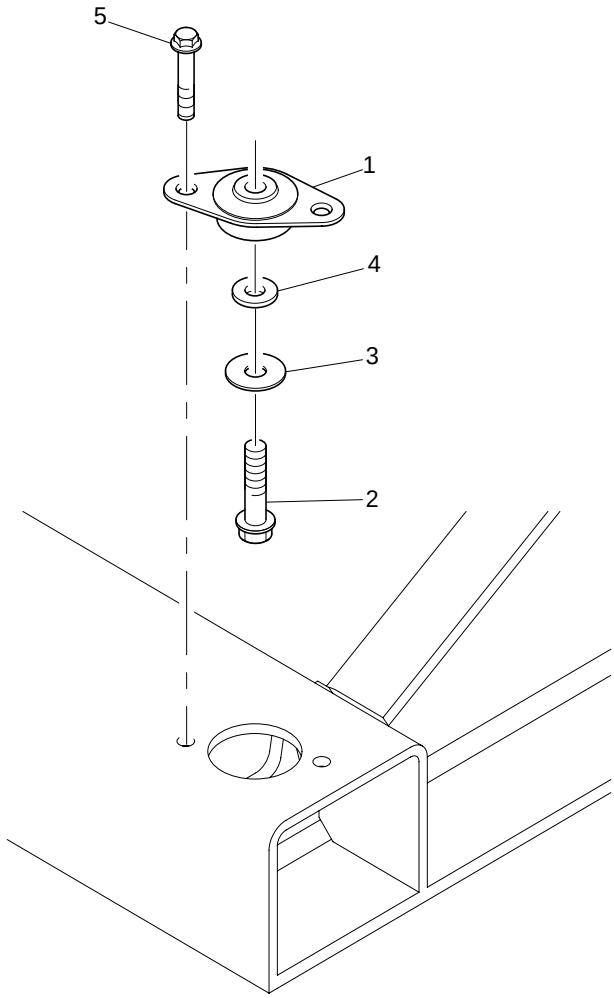

Radiator & Cowling	Plate B
	ZMHR0549

Item	Part No.	References	Qty.	Description	Notes
1	33546		2	RUBBER	
2	2314J008		2	SCREW	
3	0920471		2	WASHER	
4	33115117		2	SPACER	
5	2311F055		4	SCREW	

Radiator Bracket & Fixings	Plate A
	ZMHR0549

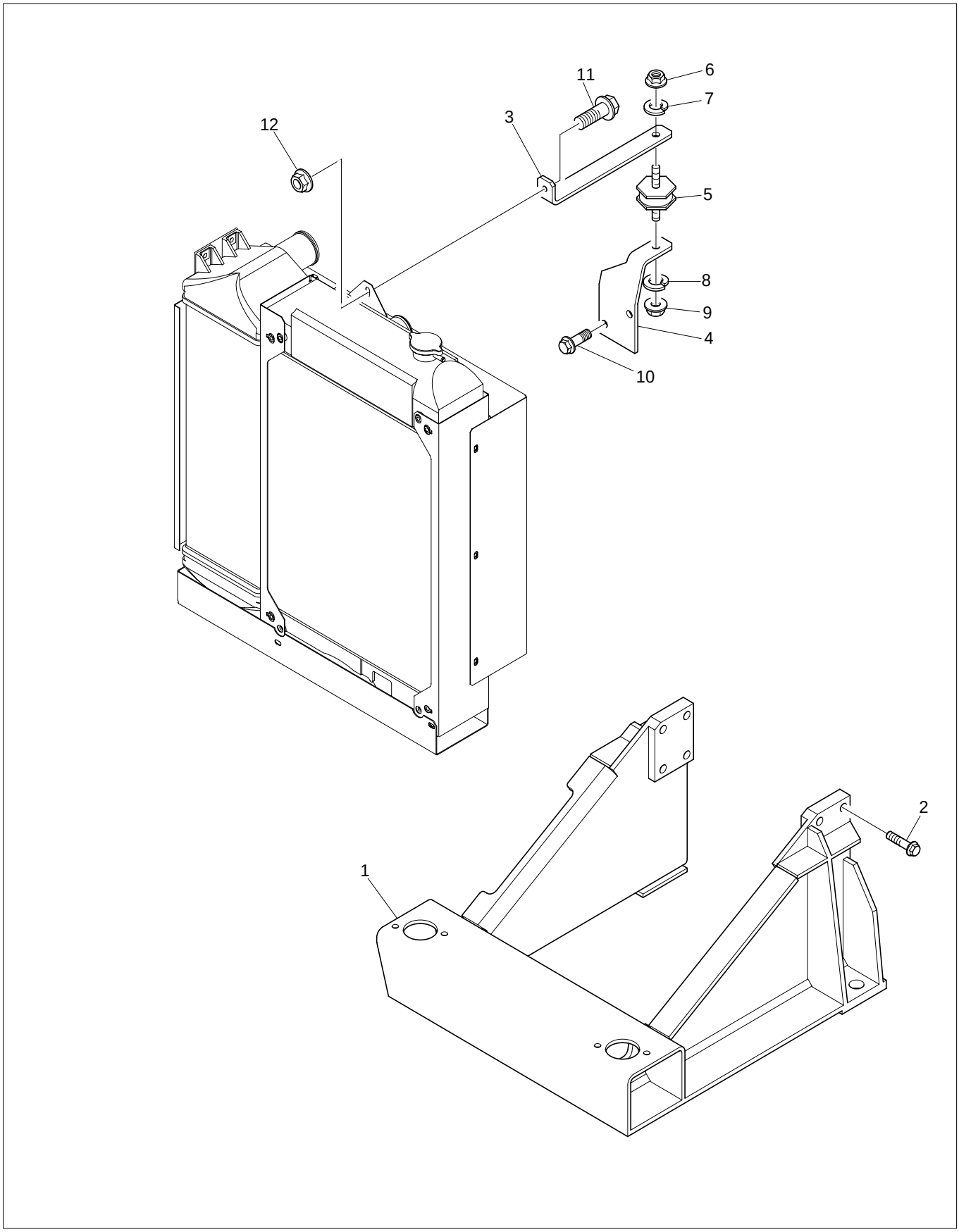

Radiator Bracket & Fixings	Plate A
	ZMHR0549

Item	Part No.	References	Qty.	Description	Notes
1	3827A017		1	BRACKET	
2	2314J634		8	SCREW	
3	3644A018		1	BRACKET	
4	3651A018		1	BRACKET	
5	2634A115		1	MOUNTING	
6	2318A604		2	NUT	
7	2134A010		1	WASHER	
8	2134A010		1	WASHER	
9	2318A604		1	NUT	
10	2314J002		2	SCREW	
11	2314H004		1	SCREW	
12	2318A603		1	NUT	

ZMHR0549

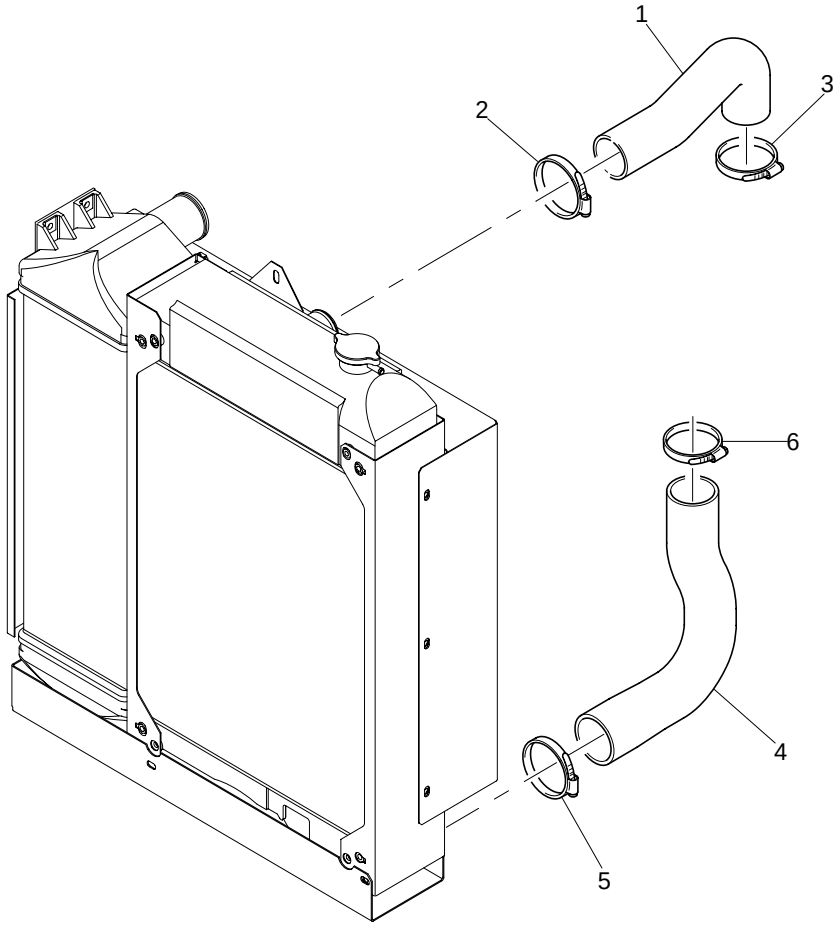

Radiator & Hoses	Plate C
	ZMHR0549

Item	Part No.	References	Qty.	Description	Notes
1	3383A029		1	HOSE	
2	2481D074		1	HOSE CLIP	
3	2481D074		1	HOSE CLIP	
4	3383A031		1	HOSE	
5	2481D074		1	HOSE CLIP	
6	2481D074		1	HOSE CLIP	

ZMHR0549

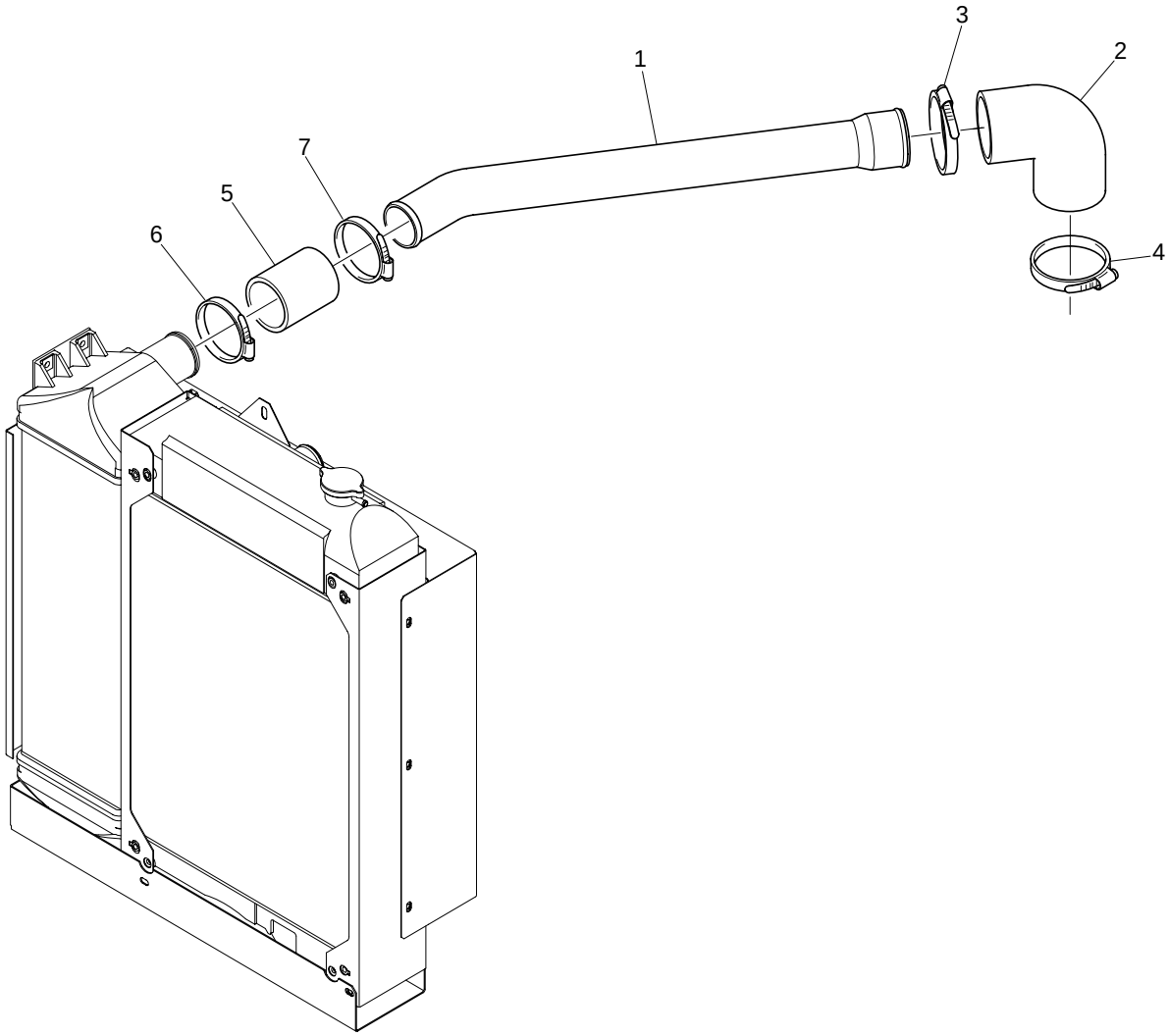

Radiator & Hoses	Plate A
	ZMHR0549

Item	Part No.	References	Qty.	Description	Notes
1	3427A013		1	PIPE	
2	3783N001		1	HOSE	
3	2481D076		1	HOSE CLIP	
4	2481D076		1	HOSE CLIP	
5	3383A034		1	HOSE	
6	2481D075		1	HOSE CLIP	
7	2481D075		1	HOSE CLIP	

ZMHR0549

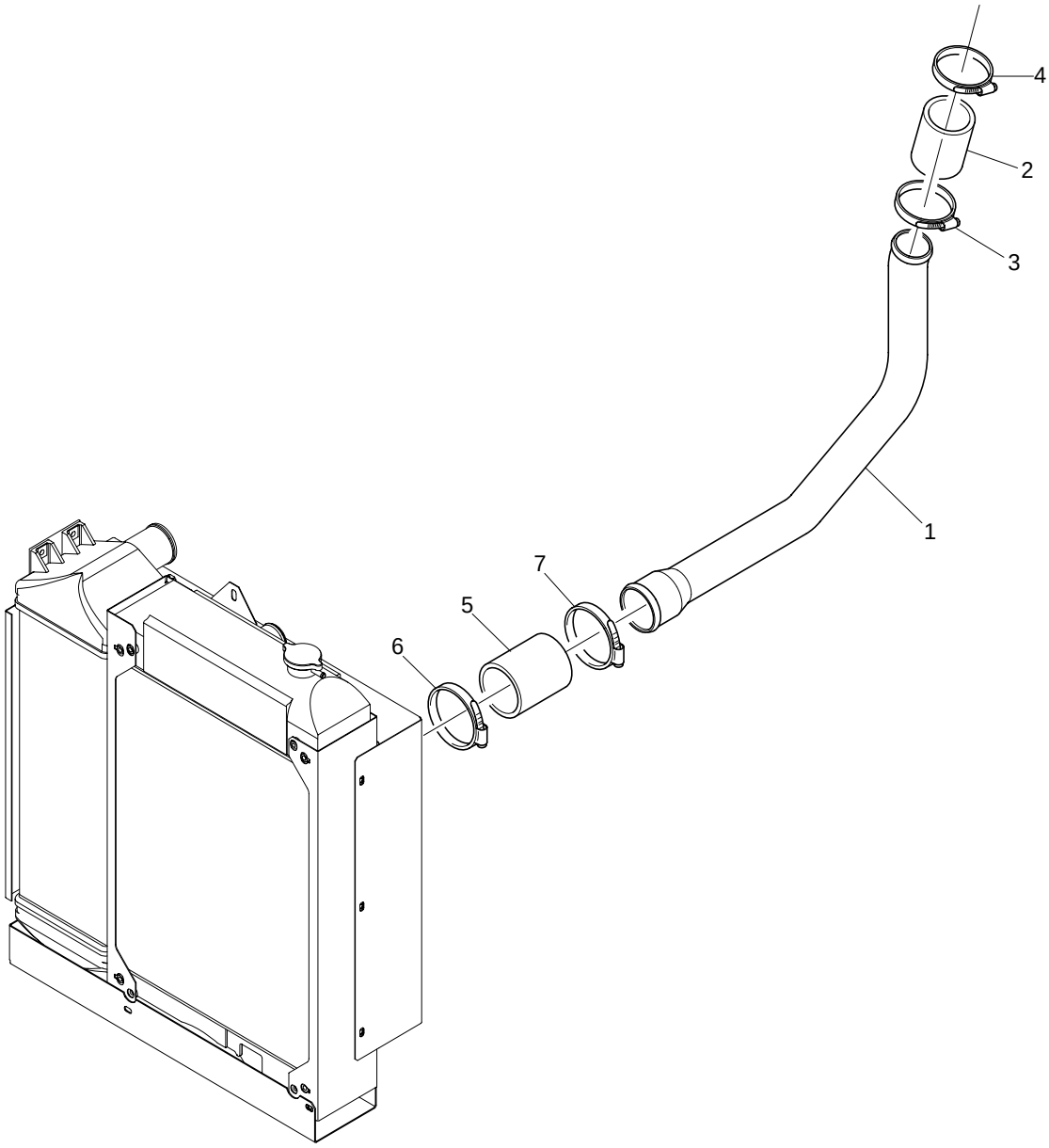

Radiator & Hoses	Plate B
	ZMHR0549

Item	Part No.	References	Qty.	Description	Notes
1	3477A002		1	PIPE	
2	3383A032		1	HOSE	
3	2481D074		1	HOSE CLIP	
4	2481D074		1	HOSE CLIP	
5	3383A034		1	HOSE	
6	2481D075		1	HOSE CLIP	
7	2481D075		1	HOSE CLIP	

Guards	Plate A
	ZMHR0549

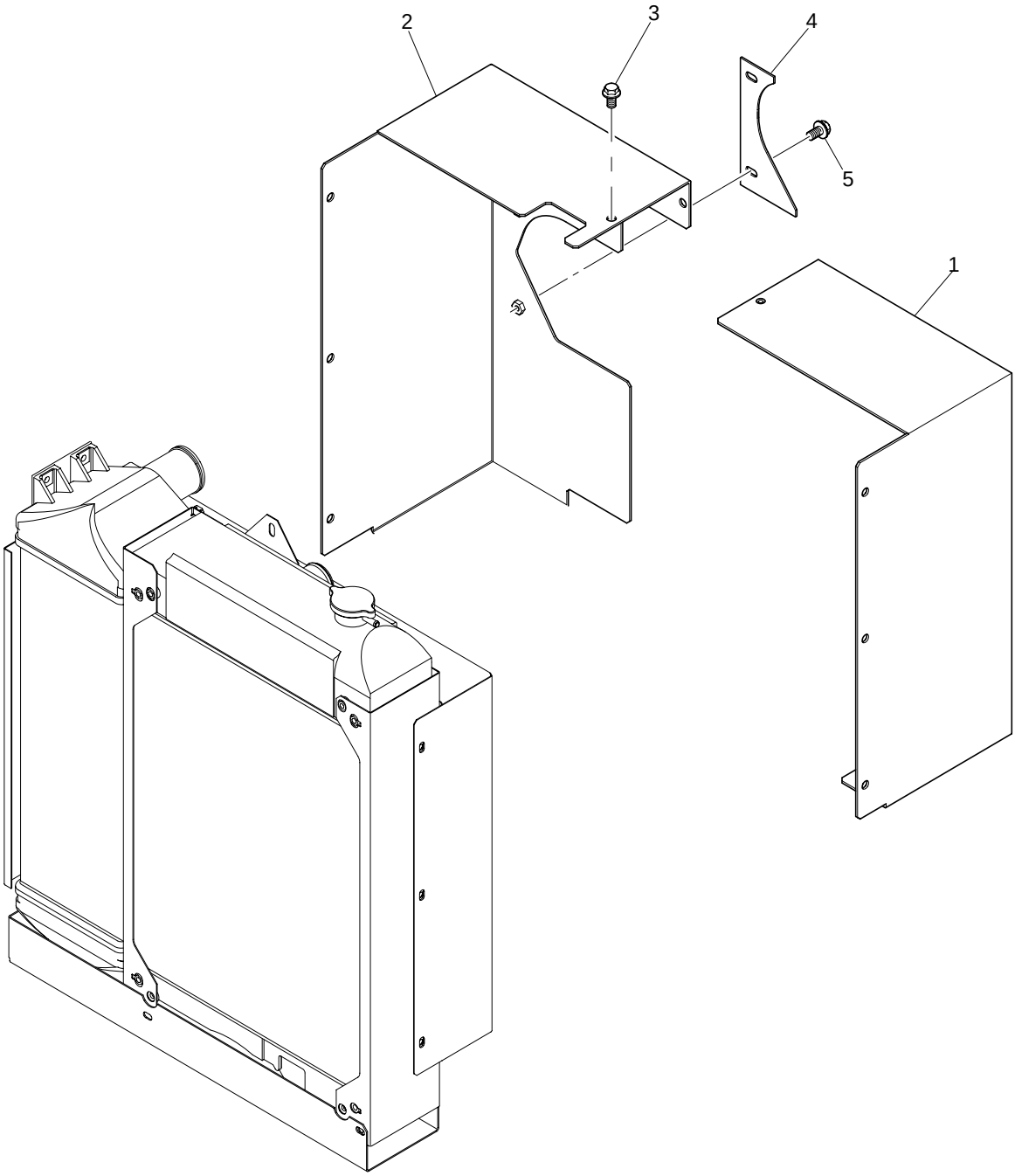

Guards	Plate A
	ZMHR0549

Item	Part No.	References	Qty.	Description	Notes
1	3756V085		1	RADIATOR GUARD	
2	3756V084		1	RADIATOR GUARD	
3	2314H001		2	SCREW	
4	3756V079		1	RADIATOR GUARD	
5	2314H001		2	SCREW	

ZVHR0102

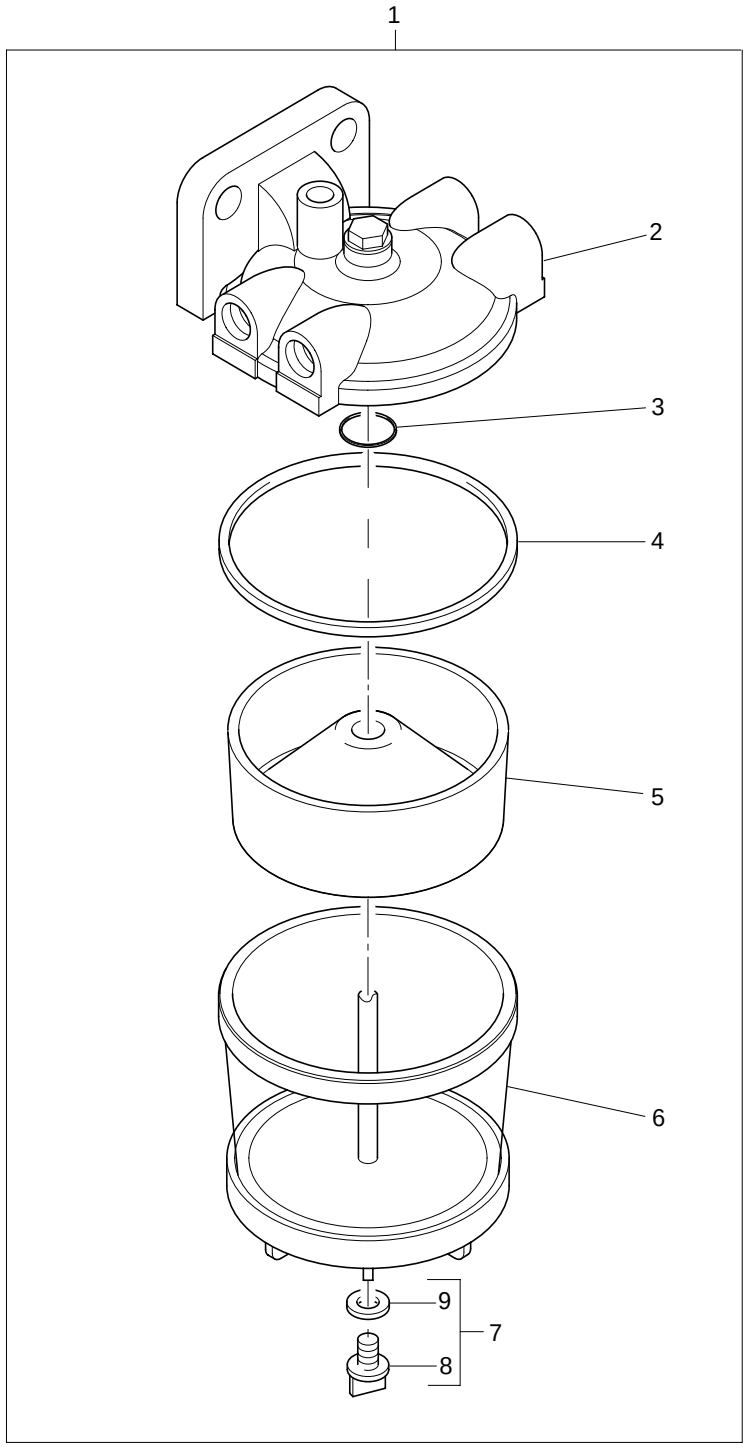

Fuel Pre-Lift Pump	Plate A
	ZVHR0102

Item	Part No.	References	Qty.	Description	Notes
1	2656086		1	FUEL FILTER	
2	├─	⇨ 2656086	1	FILTER HEAD	
3	├─ 26560016		1	WASHER	
4	├─ 0490786		2	O RING	
5	├─ 26560156		1	SEPARATOR	
6	├─ 26560075		1	CONTAINER	
7	└─ 26560614		1	PLUG	
8	│ ├─	⇨ 26560614	1	PLUG	
9	│ └─ 26431192		1	WASHER	

ZVHR0102

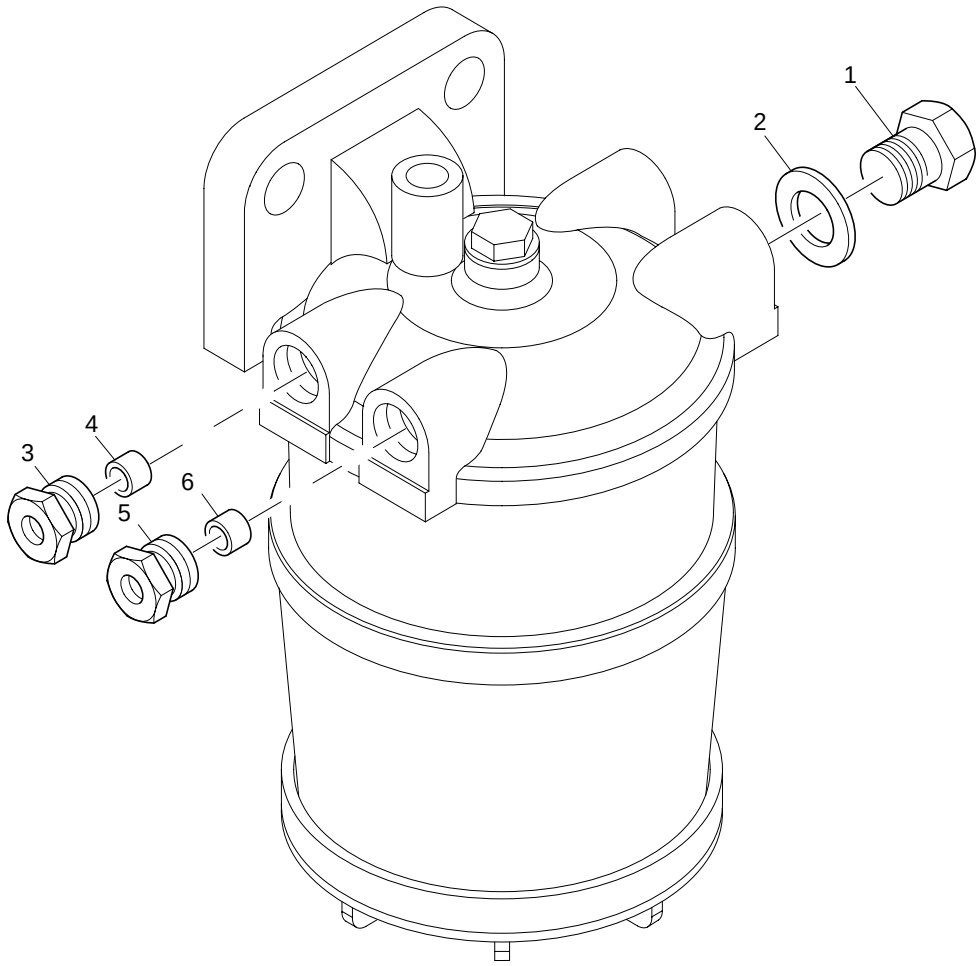

Fuel Pre-Lift Pump	Plate B
	ZVHR0102

Item	Part No.	References	Qty.	Description	Notes
1	0650204		2	PLUG	
2	0920154		2	WASHER	
3	33532129		1	NUT	
4	0566004		1	OLIVE	
5	33532129		1	NUT	
6	0566004		1	OLIVE	

ZZHR1012

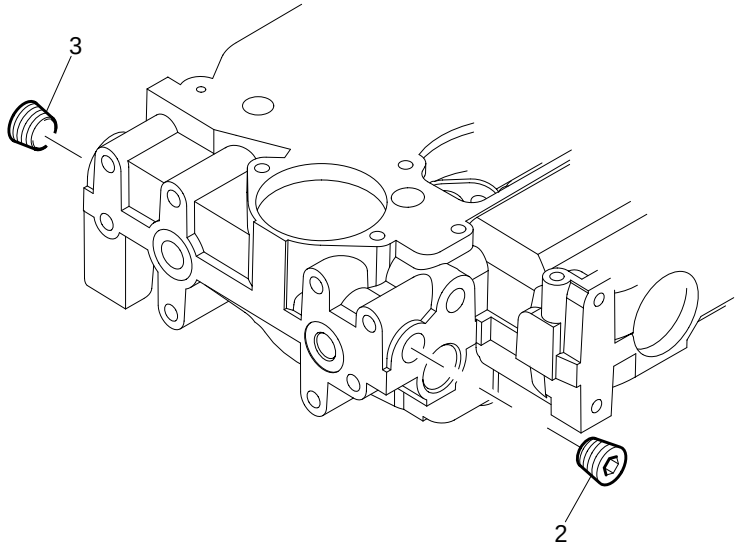

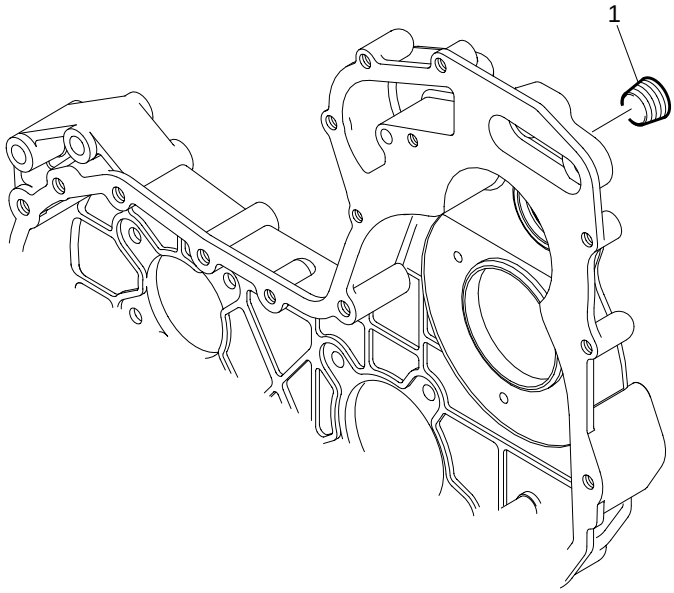

ZZHR1012

Item	Part No.	References	Qty.	Description	Notes
1	2431154		1	PLUG	
2	2431154		1	PLUG	
3	2431154		1	PLUG	

SACR0001

1

Top Service Kit

Kit d'Entretien Haut du Moteur

Wartungssatz für Motoroberteil

Kit per la manutenzione della parte superiore del motore

Juego de Servicio Superior

Top Service Kit	Plate A
	SACR0001

Item	Part No.	References	Qty.	Description	Notes
1	U5LT0348	a. b.	1	TOP JOINT AND GASKET KIT	
2	3681E044	a. b.	1	CYLINDER HEAD GASKET	
3	3681A055		1	ROCKER COVER JOINT	
4	2415H008		1	O RING	
5	3681V512		1	EXHAUST MANIFOLD JOINT	
6	3684N503		1	JOINT	
7	3688A035		1	JOINT	
8	3688A029		1	JOINT	
9	2418M514		8	VALVE STEM SEAL	
10	L311FF02		4	INJECTOR WASHER	
11	3688A036		1	JOINT	

History

a.

1	U5LT0348	1	TOP JOINT AND GASKET KIT
2	3681E046	1	CYLINDER HEAD GASKET

b.

1	U5LT0348	1	TOP JOINT AND GASKET KIT
2	3681E044	1	CYLINDER HEAD GASKET

SGBR0371

1

Bottom Joints & Gasket Kit

Kit d'Entretien Bas du Moteur

Wartungssatz für Motorunterteil

Kit per la manutenzione della parte inferiore del motore

Juego de Servicio de la Parte Inferior

Bottom Service Kit	Plate A
	SGBR0371

Item	Part No.	References	Qty.	Description	Notes
1	U5LB0371		1	BOTTOM JOINT AND GASKET	
2	├─ 2415715		1	O RING	
3	├─ 36832137		1	JOINT	
4	├─ 3617V015		1	TIMING CASE JOINT	
5	├─ 3617V016		1	TIMING CASE JOINT	
6	├─ 3681P047		1	COVER JOINT	
7	├─ 26420318		1	O RING	
8	├─ 3688A041		1	JOINT	
9	├─ 3688A039		1	JOINT	
10	├─ 3682A011		1	WATER PUMP JOINT	
11	├─ 3688A035		1	JOINT	
12	├─ 3685A024		1	JOINT	
13	├─ 3685A025		1	JOINT	
14	└─ 3681K037		1	SUMP JOINT	

Parts Index

Description	Part No.	Page
ADAPTOR	3347A041	113
AIR FILTER	2652C201	109, 111
AIR FILTER ELEMENT	26510393	111
	26510394	111
ALTERNATOR	2871A301	85
ALTERNATOR BRACKET	3824A071	87
ATOMISER	2645K012	31
BANJO BOLT	3218R036	105, 105
BAR	3161C015	127
BIG END BEARING KIT	U5ME0013	13
	U5ME0013A	13
	U5ME0013B	13
	U5ME0013C	13
BLANKING PLATE	3623A009	11, 69
	4148K006	97
BLANKING PLUG	2485A108	11
	2487A452	43
BLOCK	3241N001	73
BOLT	32186137	73
BOOST CONTROL PIPE	4121A058	39
BOTTOM JOINT AND GASKET KIT	U5LB0371	165
BRACKET	3641A006	27
	3644A018	147
	3644A019	109
	3651A018	147
	3733A008	125
	3821M003	131
	3821M004	131
	3823A051	113
	3827A017	147

Description	Part No.	Page
BREATHER PIPE	4134K015	61
BRIDGE PIECE	3627P041	51
BUSH	0050345	93
CABLE	3161C017	35
CAMSHAFT	3141D222	25
CAMSHAFT BUSH	3112D071	11
CAMSHAFT GEAR	3117N001	93
CAP	2646E501	41
	3788A002	57
	3788A003	57
CIRCLIP	2721332	15
	2722A022	23, 49
CLIP	2481D456	125
	2481D556	33
	2481D558	33
	2646E017	29
	K138AF02	125
CONNECTION	33554128	67
	3763A045	125
	3763A046	121
	4133L048	79
	4133L501	81
	4148K007	117
CONNECTOR	2815512	135
	2815651	135
CON ROD BOLT	3212V003	17
CONROD KIT	4115C311	17
	4115C312	17
	4115C313	17
	4115C314	17

Description	Part No.	Page
	4115C315	17
	4115C316	17
CONTAINER	26560075	157
CORE PLUG	2485A109	37
COTTER	3142W004	21, 21
COVER	3788N003	59
COVER JOINT	3681P047	95, 165
COVER PLATE	3615A009	57
COWL	24850074	143
CRANKSHAFT GEAR	3117C221	13
CRANKSHAFT KIT	ZZ90222	13
CRANKSHAFT PULLEY	3115T051	73
CUP PLUG	2485A124	63
CYLINDER BLOCK KIT	ZZ50311	11
CYLINDER HEAD COVER ASSY	4142X293	57
CYLINDER HEAD GASKET	3681E044	21, 163, 163
	3681E046	21, 163
CYLINDER HEAD KIT	ZZ80268	21
DIAPHRAGM	3789A001	57
DIPSTICK	3178C077	53
DOWEL	0350025	43
	2116053	93
	3244A009	11
DRAIN PLUG	24850077	143
EXHAUST ELBOW	3766A131	113
EXHAUST MANIFOLD	3778E201	115
EXHAUST MANIFOLD JOINT	3681V512	115, 163
EXHAUST VALVE	3142A151	21

Description	Part No.	Page
EXHAUST VALVE INSERT	3314A161	21
EXTENSION	3748W242	83
FAN	2485C518	83
FANBELT	2614B656	49
FAN DRIVE HOUSING	4113K005	49
FAN PULLEY	3115C111	49
FLEXIBLE HOSE	2646F501	41
FLYWHEEL ASSEMBLY	4111D128	45
FLYWHEEL HOUSING	3713M049	43
FRONT OIL SEAL	2418F436	91
FUEL FEED PIPE	2646F001	123
	2646F002	125
FUEL FILTER	2656086	157
FUEL FILTER ELEMENT KIT	26560201	121
FUEL INJECTION PIPE - NO 1 CYL	3525A061	29
	3525A062	29
	3525A063	29
	3525A064	29
FUEL INJECTION PUMP	2644H009	27
GLOW PLUG	2666A016	127
2 GROOVE ALTERNATOR PULLEY	3115A049	89
HOSE	3383A029	149
	3383A031	149
	3383A032	153
	3383A034	151, 153
	33872632	61
	3783N001	151
	3783R007	109

Description	Part No.	Page
HOSE CLIP	2481877	61
	2481D074	149, 149, 149, 149, 153, 153
	2481D075	109, 151, 151, 153, 153
	2481D076	151, 151
	2481D077	109
HOUSING	3743H011	45
HUB	33426161	93
IDLER GEAR	3117N042	93
INJECTION PUMP GEAR	3117L261	27
INJECTOR CLAMP	3274A004	31
	3751A231	31
	3751A241	31
INJECTOR WASHER	L311FF02	31, 163
INLET MANIFOLD JOINT	3682A013	117
INLET VALVE	3142H071	21
INLET VALVE INSERT	3314A151	21
JOINT	36832137	55, 165
	3684N503	119, 163
	3685A024	65, 165
	3685A025	65, 165
	3688A029	103, 163
	3688A035	107, 163, 165
	3688A036	107, 163
	3688A038	61
	3688A039	11, 67, 69, 165
	3688A041	165
LEVER	36155429	87

Description	Part No.	Page
LIFTING BRACKET	3615A008	129
	3617A015	129
	3624A016	129
LIFT PUMP	4134M004	121
MAIN BEARING KIT	U5MB0018	13
	U5MB0018A	13
	U5MB0018B	13
	U5MB0018C	13
METRIC BOLT	3211C002	19
MOUNTING	2634A115	147
MOUNTING BRACKET	24850076	143
MOUNTING KIT	U5MK0696	121
NOZZLE	2645K612	31
NUT	0576052	23, 23
	0576111	39
	2318A108	27
	2318A603	27, 109, 147
	2318A604	47, 87, 147, 147
	2318A634	103, 113
	2318D208	83, 87
	33532129	159, 159
	3353D005	53
OIL COOLER	2486A217	65
	4134W001	65
OIL FILLER CAP	4142X099	57
OIL FILTER	2654407	71
OIL FILTER HEAD	4134E058	67
OIL PRESSURE SWITCH	2848062	137
OIL PUMP	4132F071	101
OLIVE	0566002	39

Description	Part No.	Page
	0566004	159, 159
	33811112	39
	33812116	53
O RING	0490786	157
	2415715	51, 165
	2415A068	61
	2415A131	57
	2415H001	35
	2415H002	67
	2415H003	21, 35, 139
	2415H008	81, 163
	2415H009	67
	2415H503	97
	2418F001	79
	2418F002	79
	26420318	165
PIPE	3427A013	151
	3477A002	153
PISTON AND RING KIT	4115P015	15
PISTON COOLING JET	2113A001	11
PISTON RING KIT	UPRK0002	15
PLAIN WASHER	2415D001	27
PLATE	31812157	135
	3241H009	93
	3611M006	119
	36212132	43
PLUG	0650204	159
	0650588	11, 21
	0650710	11
	2431154	21, 161, 161, 161

Description	Part No.	Page
	2485A104	23
	2487204	43
	2487207	133
	2487Y005	43
	26560614	157
	3212P008	11
	3212V004	133
	3212V005	99
	3212V006	11
	32141316	11
	32186405	51
	32416117	21
	3241A011	11
	3241A012	11
	3278A004	67
	3278A005	35
	3278A006	21, 35
	3278A007	67
PUSHROD	31434307	25
RADIATOR	2486F102	143
RADIATOR CAP	24850073	143
RADIATOR GUARD	3756V079	155
	3756V084	155
	3756V085	155
REAR OIL SEAL HOUSING	2418F704	19
ROCKER ARM ASSEMBLY	4115R314	23
	4115R315	23
ROCKER ASSEMBLY	4115R612	23
ROCKER COVER JOINT	3681A055	57, 163

Description	Part No.	Page
ROCKER SHAFT ASSEM-BLY	4115R703	23
ROCKER SHAFT SPRING	3174A015	23
RUBBER	33546	145
SCREW	0096803	45
	2151A001	57
	2161A011	57, 61
	2172175	45
	2311D039	51
	2311F055	145
	2314F001	11
	2314F003	59
	2314F004	107
	2314F909	121
	2314H001	155, 155
	2314H002	33, 51, 95
	2314H003	27, 51, 79, 91, 107
	2314H004	27, 55, 65, 81, 147
	2314H005	75, 109
	2314H006	65
	2314H008	125
	2314H012	75, 95
	2314H031	51
	2314H032	97
	2314H033	11, 69, 109, 119
	2314H034	67, 91, 117
	2314H052	87
	2314H102	43, 143, 143
	2314H103	87

Description	Part No.	Page
	2314J002	27, 95, 97, 129, 129, 147
	2314J003	113
	2314J004	113
	2314J005	49
	2314J007	87, 109
	2314J008	101, 145
	2314J010	93
	2314J012	87
	2314J204	43
	2314J603	43, 131
	2314J606	93
	2314J634	147
	2314K161	65
	2314K164	75
	2314W008	31
	2314W009	31
	2316A901	23
	2316A902	23
	2316T130	107
	32114145	23, 23
	32166329	11
	3218A011	21
	3218A012	21
	3218J013	115
SEAL	36843154	43
SENDER	2846A101	139
	2848A127	35
SEPARATOR	26560156	157
SLEEVE	35683	135

Description	Part No.	Page
	35684	135
SMALL END BUSH	3112A005	17
SPACER	0920465	87
	33115117	145
	33134418	51
	3313A006	125
SPRING	3174A017	57
	3175P003	61
STARTERMOTOR	2873K404	47
STARTER RING GEAR	31162121	45
STUD	2313C078	47
	2313H236	83
	2313M377	103, 113
SUCTION PIPE	3575A059	55
SUMP	3717Y061	51
SUMP JOINT	3681K037	51, 165
SUPPORT BRACKET	36241123	61
	3651A016	33
SWITCH	2846131	135
TAPPET	3142U031	25
TEMPERATURE GAUGE	2755A106	141
THERMOSTAT	2485C041	81
THIMBLE	33142111	11
THRUST WASHER	3112X011	93
	31137312	13
	31137322	13
	31137551	13
	31137561	13
TIMING CASE	3716C471	91
TIMING CASE JOINT	3617V015	91, 165

Description	Part No.	Page
	3617V016	91, 165
TIMINGGEAR COVER	4142A502	95
TOP JOINT AND GASKET KIT	U5LT0348	163, 163, 163
TUBE ASSEMBLY	3577A125	53
TURBOCHARGER	2674A403	103
TURBO DRAIN PIPE	3584A001	107
TURBO FEED PIPE	4128A027	105
UNION	0206002	39
UNION NUT	3353D004	39
VALVE	26510386	111
VALVE CAP	3342A011	21, 21
VALVE GUIDE	3313E021	21, 21
VALVE SPRING	3174A016	21, 21
VALVE STEM SEAL	2418M514	21, 21, 163
WASHER	0920154	159
	0920471	145
	2131A008	87
	2131A506	105, 105, 105, 105
	2131A507	121
	2134A010	147, 147
	2134A502	23
	2411D008	27
	26431192	157
	26560016	157
	33117127	45
	3321A003	93
	K134AF01	27
WATER PUMP GEAR	24880232	77
WATER PUMP JOINT	3682A011	75, 165

Description	Part No.	Page
WATER PUMP KIT	U5MW0194	75
WATER PUMP REPAIR KIT	U7LW0172	77
WOODRUFF KEY	0500012	13, 25, 93